DICOM Conformance Statement

CIRRUS™ HD-OCT 5000/500 Instrument and Review Software

Version 11.5

Carl Zeiss Meditec, Inc.

5160 Hacienda Drive

Dublin, CA 94568

USA

www.zeiss.com/med

Copyright: © Carl Zeiss Meditec , Inc.

1 Conformance Statement Overview

For the Intended Use / Indications for Use, see the CIRRUS™ HD-OCT Instructions for Use.

The CIRRUS™ HD-OCT supports DICOM to achieve interoperability across devices. The Application Software implements one single DICOM Application Entity which allows to:

- query modality worklist
- query patients and studies
- export evidence reports
- archive scan data and analysis data (including OPT and OP)
- retrieve scan data and analysis data

This document is structured as suggested in the DICOM Standard (PS 3.2: Conformance).

Table 1-1 Network Services Supported

SOP Classes	User of Service (SCU)	Provider of Service (SCP)
Transfer		
Encapsulated PDF Storage	Yes	No
Ophthalmic Photography 8 Bit Image Storage[1]	Yes	No
Ophthalmic Tomography Image Storage[1]	Yes	No
Raw Data Storage	Yes	Yes
Workflow Management		
Modality Worklist Information Model - FIND	Yes	No
Storage Commitment Push Model	Yes	No
Verification	Yes	Yes
Query / Retrieve		
Study Root Query/Retrieve Information Model – FIND	Yes	No
Study Root Query/Retrieve Information Model – MOVE	Yes	No
Patient Root Query/Retrieve Information Model – FIND	Yes	No

[1] Support depends on SW version, license and scan type. See also Table 4-1.

The CIRRUS HD-OCT does not support Media Interchange.

Copyright: © Carl Zeiss Meditec ,Inc.

2 Table of Contents

1 Conformance Statement Overview 2
2 Table of Contents 3
3 Introduction 5
3.1 Revision History 5
3.2 Audience 5
3.3 Remarks 5
3.4 Definitions and Terms 5
3.5 Abbreviations 7
3.6 References 8
4 Networking 9
4.1 Implementation Model 9
4.1.1 Application Data Flow 9
4.1.2 Functional Definition of AEs 11
4.1.2.1 Functional Definition of CIRRUS HD-OCT 11
4.1.3 Sequencing of Real-World Activities 11
4.1.3.1 CIRRUS HD-OCT activities 11
4.1.3.2 Scheduled case with Acquisition Modality 13
4.1.3.3 Scheduled case with Acquisition Modality and Review Station 14
4.1.3.4 Unscheduled case 16
4.2 AE Specifications 17
4.2.1 CIRRUS HD-OCT Acquisition Modality AE Specification 17
4.2.1.1 SOP Classes 17
4.2.1.2 Associations Policies 17
4.2.1.2.1 General 17
4.2.1.2.2 Number of Associations 17
4.2.1.2.3 Asynchronous Nature 18
4.2.1.2.4 Implementation Identifying Information 18
4.2.1.3 Association Initiation Policy 18
4.2.1.3.1 Activity – Verify Communication 18
4.2.1.3.2 Activity – Query Modality Worklist 19
4.2.1.3.3 Activity - Get scan data and analysis data 28
4.2.1.3.4 Activity – Native import 35
4.2.1.3.5 Activity – Perform scan(s) 35
4.2.1.3.6 Activity – Query Patient 38
4.2.1.3.7 Activity – Perform analysis 45
4.2.1.3.8 Activity – Archive data 49
4.2.1.4 Association Acceptance Policy 54
4.2.1.4.1 Activity – Verify Communication 54
4.2.1.4.2 Activity - Get scan data and analysis data 54
4.2.1.4.3 Activity – Archive data 54
4.3 Network Interfaces 55
4.3.1 Physical Network Interface 55
4.3.2 Additional Protocols 55
4.3.3 IPv4 and IPv6 Support 56
4.4 Configuration 56
4.4.1 AE Title/Presentation Address Mapping 56
4.4.1.1 Local AE Titles 56
4.4.1.2 Remote AE Titles 56
4.4.2 Parameters 56
4.4.2.1 General Parameters 56
5 Media Interchange 59

Copyright: © Carl Zeiss Meditec ,Inc.

6 Support of Character Sets 60
7 Security 61
8 Annexes 62
8.1 IOD Contents 62
8.1.1 Created SOP Instance(s) 62
8.1.1.1 Encapsulated PDF IOD 63
8.1.1.2 Ophthalmic Photography 8 Bit Information Object Definition 69
8.1.1.3 Ophthalmic Tomography Information Object Definition 82
8.1.1.4 Raw Data Information Object Definition 104
8.1.2 Usage of Attributes from Received IOD's 115
8.1.3 Attribute Mapping 115
8.1.4 Coerced/Modified Files 115
8.2 Data Dictionary of Private Attributes 116
8.3 Coded Terminology and Templates 116
8.4 Greyscale Image Consistency 121
8.5 Standard Extended / Specialized/ Private SOP Classes 121
8.6 Private Transfer Syntaxes 121

Copyright: © Carl Zeiss Meditec ,Inc.

3 Introduction

3.1 Revision History

Document Version	Date	Author	Changes
I	2019-02-12	Tatad Jarean	Update software version to 11.5

3.2 Audience

This document is written for the people that need to understand how CIRRUS HD-OCT will integrate into their healthcare facility. This includes both those responsible for overall imaging network policy and architecture, as well as integrators who need to have a detailed understanding of the DICOM features of the product. This document contains some basic DICOM definitions so that any reader may understand how this product implements DICOM features. However, integrators are expected to fully understand all the DICOM terminology, how the tables in this document relate to the product's functionality, and how that functionality integrates with other devices that support compatible DICOM features.

3.3 Remarks

The scope of this DICOM Conformance Statement is to facilitate integration between CIRRUS HD-OCT and other DICOM products. The Conformance Statement should be read and understood in conjunction with the DICOM Standard. DICOM by itself does not guarantee interoperability. The Conformance Statement does, however, facilitate a first-level comparison for interoperability between different applications supporting compatible DICOM functionality.

This Conformance Statement is not supposed to replace validation with other DICOM equipment to ensure proper exchange of intended information. In fact, the user should be aware of the following important issues:

- The comparison of different Conformance Statements is just the first step towards assessing interconnectivity and interoperability between the product and other DICOM conformant equipment.
- Test procedures should be defined and executed to validate the required level of interoperability with specific compatible DICOM equipment, as established by the healthcare facility.

3.4 Definitions and Terms

Informal definitions are provided for the following terms used in this Conformance Statement.

The DICOM Standard is the authoritative source for formal definitions of these terms.

Abstract Syntax

the information agreed to be exchanged between applications, generally equivalent to a Service/Object Pair (SOP) Class.

Examples: Verification SOP Class, Modality Worklist Information Model Find SOP Class, Computed Radiography Image Storage SOP Class.

Application Entity (AE)

an end point of a DICOM information exchange, including the DICOM network or media interface software; i.e., the software that sends or receives DICOM information objects or messages. A single device may have multiple Application Entities.

Application Entity Title

the externally known name of an Application Entity, used to identify a DICOM application to other DICOM applications on the network.

Copyright: © Carl Zeiss Meditec ,Inc.

Application Context

the specification of the type of communication used between Application Entities.

Example: DICOM network protocol.

Association

a network communication channel set up between Application Entities.

Attribute

a unit of information in an object definition; a data element identified by a tag. The information may be a complex data structure (Sequence), itself composed of lower level data elements.

Examples: Patient ID (0010,0020), Accession Number (0008,0050), Photometric Interpretation (0028,0004), Procedure Code Sequence (0008,1032).

Information Object Definition (IOD)

the specified set of Attributes that comprise a type of data object; does not represent a specific instance of the data object, but rather a class of similar data objects that have the same properties. The Attributes may be specified as Mandatory (Type 1), Required but possibly unknown (Type 2), or Optional (Type 3), and there may be conditions associated with the use of an Attribute (Types 1C and 2C).

Examples: MR Image IOD, CT Image IOD, Print Job IOD.

Joint Photographic Experts Group (JPEG)

a set of standardized image compression techniques, available for use by DICOM applications.

Media Application Profile

the specification of DICOM information objects and encoding exchanged on removable media (e.g., CDs)

Module

a set of Attributes within an Information Object Definition that are logically related to each other.

Example: Patient Module includes Patient Name, Patient ID, Patient Birth Date, and Patient Sex.

Negotiation

first phase of Association establishment that allows Application Entities to agree on the types of data to be exchanged and how that data will be encoded.

Presentation Context

the set of DICOM network services used over an Association, as negotiated between Application Entities; includes Abstract Syntaxes and Transfer Syntaxes.

Protocol Data Unit (PDU)

a packet (piece) of a DICOM message sent across the network. Devices must specify the maximum size packet they can receive for DICOM messages.

Query Key

A input value for a query process. Query Keys denote the set of DICOM tags that are sent from the SCU to SCP and thus control the query result.

Security Profile

a set of mechanisms, such as encryption, user authentication, or digital signatures, used by an Application Entity to ensure confidentiality, integrity, and/or availability of exchanged DICOM data

Service Class Provider (SCP)

role of an Application Entity that provides a DICOM network service; typically, a server that performs operations requested by another Application Entity (Service Class User).

Examples: Picture Archiving and Communication System (image storage SCP, and image query/retrieve SCP), Radiology Information System (modality worklist SCP).

Service Class User (SCU)

role of an Application Entity that uses a DICOM network service; typically, a client.

Copyright: © Carl Zeiss Meditec ,Inc.

Examples: imaging modality (image storage SCU, and modality worklist SCU), imaging workstation (image query/retrieve SCU)

Service/Object Pair (SOP) Class

the specification of the network or media transfer (service) of a particular type of data (object); the fundamental unit of DICOM interoperability specification.

Examples: Ultrasound Image Storage Service, Basic Grayscale Print Management.

Service/Object Pair (SOP) Instance

an information object; a specific occurrence of information exchanged in a SOP Class.

Examples: a specific x-ray image.

Tag

a 32-bit identifier for a data element, represented as a pair of four digit hexadecimal numbers, the “group” and the “element”. If the “group” number is odd, the tag is for a private (manufacturer-specific) data element.

Examples: (0010,0020) [Patient ID], (07FE,0010) [Pixel Data], (0019,0210) [private data element]

Transfer Syntax

the encoding used for exchange of DICOM information objects and messages.

Examples: JPEG compressed (images), little endian explicit value representation.

Unique Identifier (UID)

a globally unique “dotted decimal” string that identifies a specific object or a class of objects; an ISO-8824 Object Identifier.

Examples: Study Instance UID, SOP Class UID, SOP Instance UID.

Value Representation (VR)

the format type of an individual DICOM data element, such as text, an integer, a person’s name, or a code. DICOM information objects can be transmitted with either explicit identification of the type of each data element (Explicit VR), or without explicit identification (Implicit VR); with Implicit VR, the receiving application must use a DICOM data dictionary to look up the format of each data element.

3.5 Abbreviations

Table 3-1 Abbreviations used in this document

Abbreviation	Definition
AE	Application Entity
AET	Application Entity Title
DICOM	Digital Imaging and Communications in Medicine
ILE	Implicit Little Endian
ELE	Explicit Little Endian
EPDF	Encapsulated PDF
IM	Information Model
IOD	Information Object Definition
JPG-1	JPEG Coding Process 1 transfer syntax; JPEG Baseline; ISO 10918-1
J2K	JPEG 2000 Image Compression
J2K-LL	JPEG 2000 Image Compression (Lossless Only)
RLE	Run Length Encoding
MWL	Modality Worklist

Copyright: © Carl Zeiss Meditec ,Inc.

MPG2	Motion Picture Expert Group 2; Abbreviation and synonym for video encoding and compression transfer syntax.
OD	Oculus Dexter, the right eye
OP	Ophthalmic Photography
OPT	Ophthalmic Tomography
OS	Oculus Sinister, the left eye
OU	Oculus Uterque, both eyes
SCP	Service Class Provider
SCU	Service Class User
SOP	Service Object Pair, union of a specific DICOM service and related IOD.
TCP/IP	Transmission Control Protocol / Internet Protocol
UID	Unique Identifier
UI	User Interface

3.6 References

NEMA PS3 / ISO 12052, Digital Imaging and Communications in Medicine (DICOM) Standard, National Electrical Manufacturers Association, Rosslyn, VA, USA (available free at http://medical.nema.org/)

Integrating the Healthcare Enterprise (IHE) EYECARE Technical Framework, rev 4.0, 2016 (available free at http://www.ihe.net/Technical_Framework/index.cfm)

Copyright: © Carl Zeiss Meditec ,Inc.

4 Networking

4.1 Implementation Model

4.1.1 Application Data Flow

Figure 4-1 CIRRUS HD-OCT Application Software as Acquisition Modality

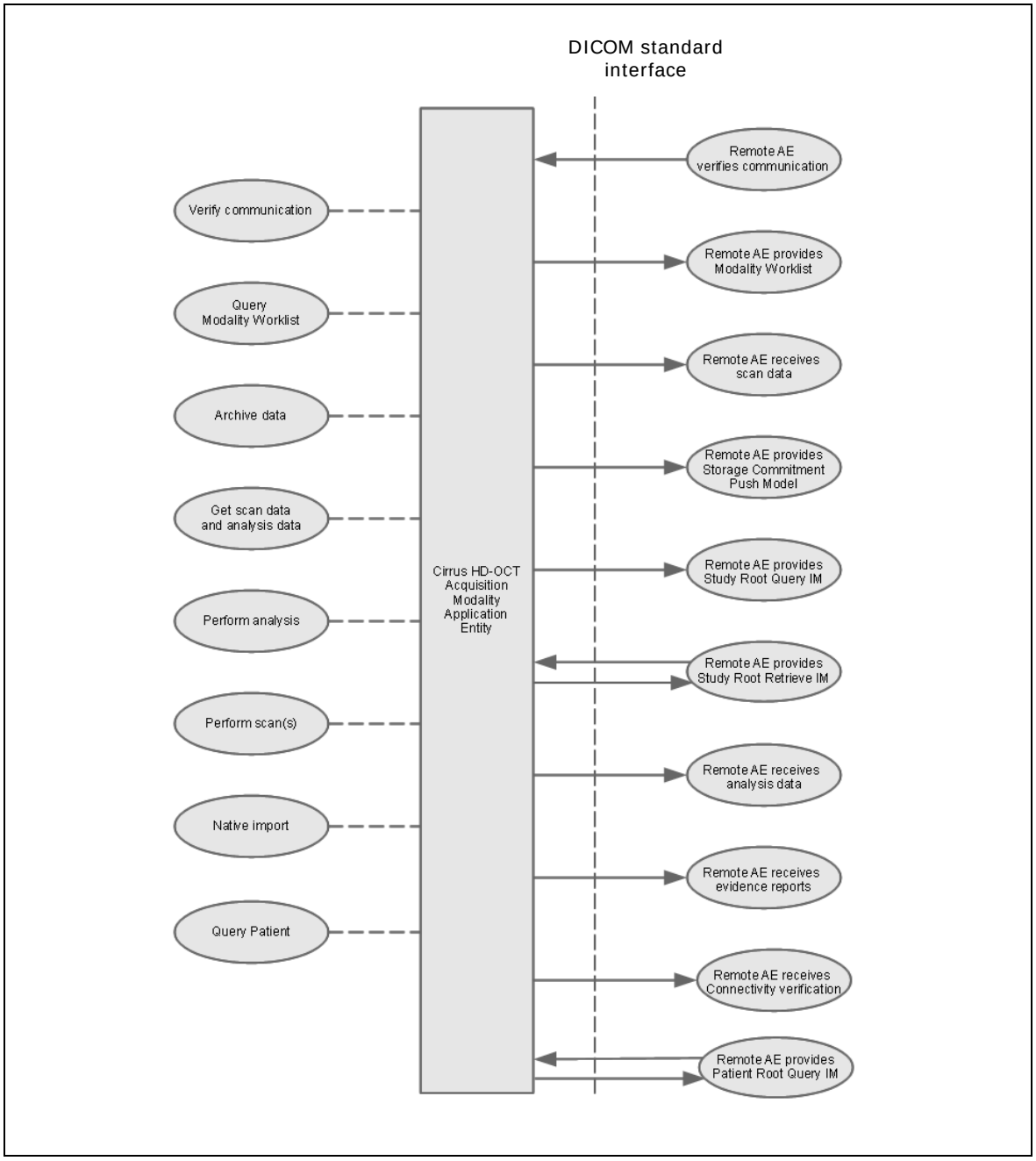

Copyright: © Carl Zeiss Meditec ,Inc.

Figure 4-2 CIRRUS HD-OCT Application Software as Review Station

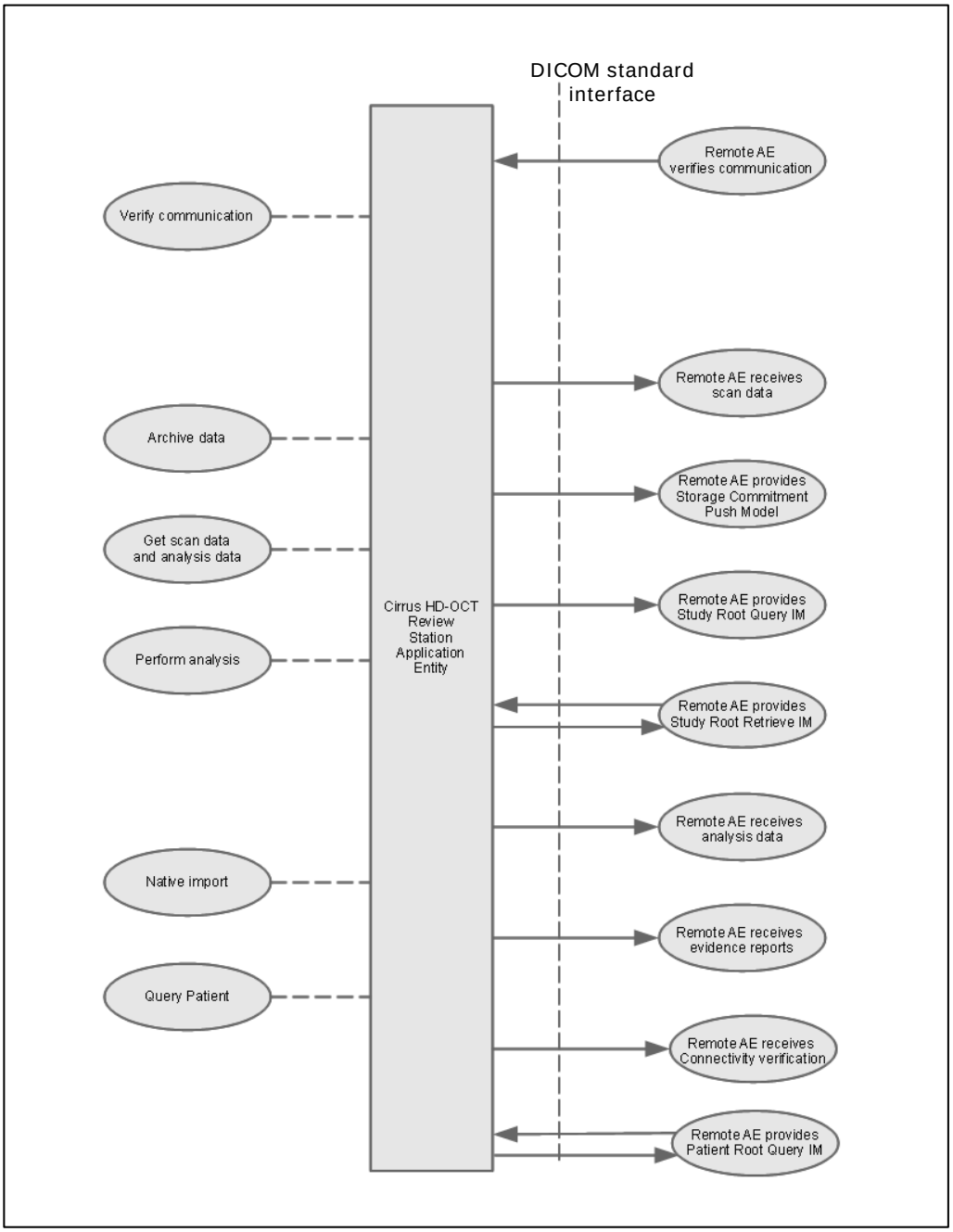

Copyright: © Carl Zeiss Meditec ,Inc.

4.1.2 Functional Definition of AEs

4.1.2.1 Functional Definition of CIRRUS HD-OCT

For the Intended Use / Indications for Use, see the CIRRUS™ HD-OCT Instructions for Use.

The CIRRUS™ HD-OCT supports DICOM to achieve interoperability across devices. The Application Software DICOM functionality allows to:

- query modality worklist
- query patients and studies
- export evidence reports
- archive scan data and analysis data (including OPT and OP)
- retrieve scan data and analysis data

The CIRRUS HD-OCT Software allows performing a verification of the configured AEs. The result of this verification contains information about the supported SOP Classes and Transfer Syntaxes.
The CIRRUS HD-OCT Software logs extensive information about the DICOM operations to its log file.

4.1.3 Sequencing of Real-World Activities

To realize the real world activities, the different entities work together. The sequence diagrams shall depict the intended workflow.

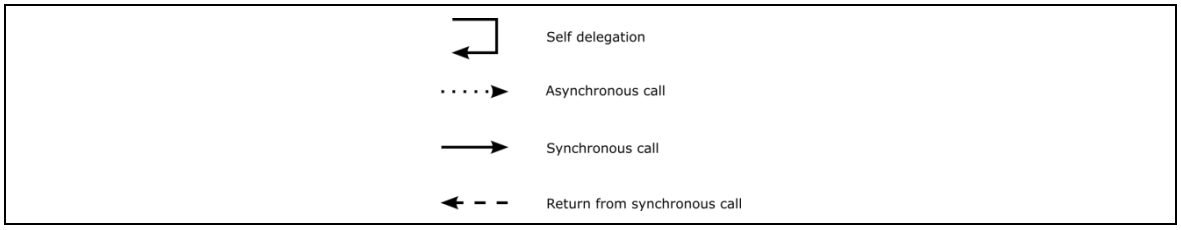

The diagrams use slightly modified UML symbols. The asynchronous call is not depicted as suggested in UML. Some objects do have more than one dashed line. It symbolizes more than one thread.

4.1.3.1 CIRRUS HD-OCT activities

Query Modality Worklist

When the patient arrives at the CIRRUS HD-OCT, the operator queries the worklist. He/she has two possibilities to do so:

Quick search: Selects the Today's Patients tab to perform a query with predefined query keys using the instrument's Scheduled Station AE Title and today's date.

Extended search capabilities: Invokes the query from the menu of the application software via "Search Worklist Patients". The operator types in search criteria and gets matching items back. The matches are listed in a table, from which the operator can select the correct item. According to the transferred data the CIRRUS HD-OCT creates an entry in the local database and the operator can then select the patient for data acquisition.

Query for Patients

The user has three application based options here. The user can use the find existing patient interface to (Last Name, Patient ID) or View Today's Patients or DICOM Retrieve option from the menu.

Based on the option used by the operator along with the search criterion provided, he/she gets matching items back from archive and studies stored on remote AE. As mentioned above, the operator also has the option of clicking on "Today's Patient" tab to quickly get to the patients based on today's date. The matches are listed in a table,

Copyright: © Carl Zeiss Meditec ,Inc.

from which the operator can select the correct item. According to the transferred data CIRRUS HD-OCT creates an entry in the local database.

The operator can then select the patient for data acquisition or analysis.

Get scan data and analysis data

This activity is optional.

With this activity the operator can query and consequently retrieve patient scan and analysis data from archive. The user achieves this by the DICOM retrieve menu item from the application software.

The user can then select a particular patient from the query result and press OK to retrieve all scan and analysis data (Raw Data IOD). It is to be noted here that Evidence documents (EPDF IOD), OP IODs and OPT IODs cannot be retrieved.

The user can then analyse the patient just retrieved as explained above.

A slight distinction need to be made here. When the user queries data, selects the patient from the list and clicks analyse, relevant analysis data is retrieved when a particular analysis is selected from the analysis explorer.

Native import

This activity is optional.

The native import takes data into the system that has been created by other Application Software instances.

Perform scan(s)

The operator selects a scan acquisition protocol and then performs the scan on patient's eye. The Application Software allows the user to review the acquired scan data before permanently saving the scan result.

This activity creates scan data and analysis data.

Sub-Activity: Save

Based on the choices driven by the user for auto archive, the scanned data and analysis data will be sent to the configured storage provider, followed by a storage commitment request to the storage commitment provider. This happens only when the user has the auto archive option checked along with "Archive Current Exam after Saving" option checked. This allows the user to initiate auto-archive immediate after performing a scan.

It has to be noted here that in this configuration no OP and OPT IODs will be generated at this time.

Perform analysis

The operator can trigger this activity by selecting a specific analysis protocol. The applicable analysis depends on the available scan data. The user can adjust parameters to optimize the analysis result.

Analysis data that has been created within the analysis activity will first be stored locally. During a later "Archive data"-activity, they will be transferred to the configured Storage Provider.

Alternatively, based on the choices driven by the user for auto-archive, the scanned data and analysis data will be sent to the configured storage provider. This happens only when the user has the auto-archive option checked along with "Archive Today's Exams after Finishing Analysis" option checked. This allows the user to initiate auto-archive only when the user has reviewed the scanned data. In an acquisition modality, the auto-archive will be followed by a storage commitment request to the storage commitment provider.

In this setup also OP and OPT IODs will be generated and auto-archived together with the Raw Data IODs carrying the acquisition and analysis data.

Sub-Activity: Trigger Export (Evidence Report)

The operator can invoke the creation of an evidence report by using the "Export to DICOM" option at any time within the analysis activity. Thus he or she can export several evidence reports during the analysis activity.

Copyright: © Carl Zeiss Meditec ,Inc.

Archive data

This activity refers to the manual archive and does not allude to automatic archive.

The activity can be triggered if no other activity is in progress.

This activity transfers acquired scan data and analysis data to the configured Storage Provider. In an acquisition modality, the application software will confirm with the configured Storage Commitment Provider for the data persistence of the transferred scan data and analysis data.

If “Send OP and OPT IODs During Archive” is enabled through application preferences, the application software includes also for acquisitions (seen in Table Table 4-1 Send OP and OPT IODs During Archive for the following acquisitions) the standard DICOM OPT Image IOD and OP 8 Bit Image IOD associated with each Raw Data IOD into the archival to the configured storage provider.

Table 4-1 Send OP and OPT IODs During Archive for the following acquisitions

Setting: Send OP and OPT IODs During Archive	**Acquisitions:** • **HD 5 Line Raster** • **5 Line Raster Enhanced** • **Macular Cube 200x200** • **Macular Cube 512x128** • **HD 1 LINE 100X** • **HD 21 LINE** • **HD CROSS** • **HD RADIAL**	**All other Acquisitions**
Enabled	Raw Data Acquisition IOD Raw Data Analysis IOD Ophthalmic Photography IOD Ophthalmic Tomography IOD	Raw Data Acquisition IOD Raw Data Analysis IOD
Disabled	Raw Data Acquisition IOD Raw Data Analysis IOD	Raw Data Acquisition IOD Raw Data Analysis IOD

4.1.3.2 Scheduled case with Acquisition Modality

The recommended case is that the patient arrives at the front desk. There could be two possibilities at this point:

- The examination can be scheduled for the instrument the moment the patient arrives
- The examination was scheduled in advance

In either case all patient and study related information is available at the moment the examination takes place This information can then be used to decide which examination to take and to verify whether the acquired information will be attached to the correct patient. The operator at the instrument can trigger all activities listed below. An activity can be triggered if no other activity is currently active. The shown order of the activities is the recommended order. Details on DIMSE level will be explained in chapters after this.

Copyright: © Carl Zeiss Meditec ,Inc.

Figure 4-3 - Scheduled Case with Acquisition Modality

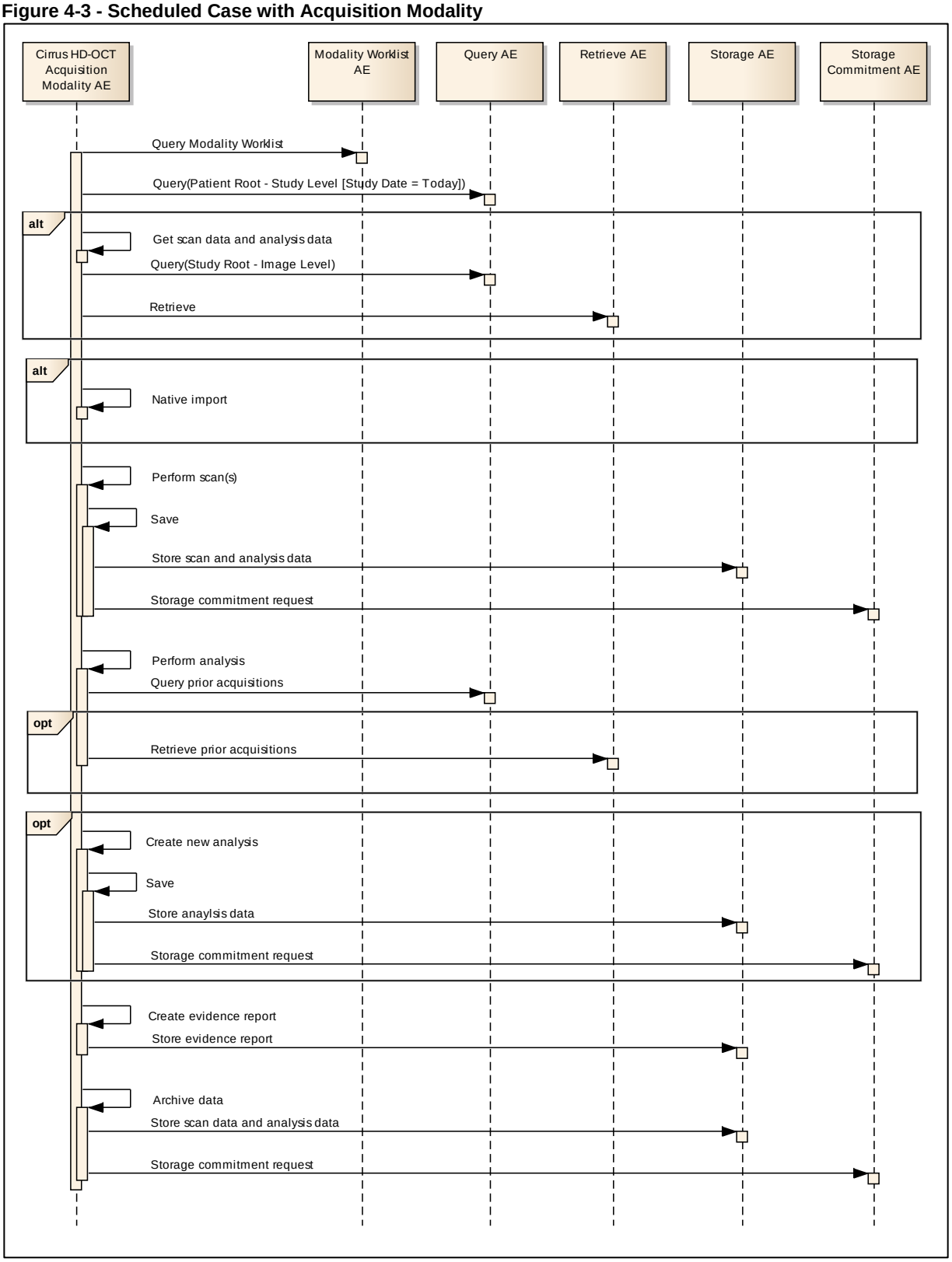

4.1.3.3 Scheduled case with Acquisition Modality and Review Station

Acquisition of scan data and its analysis can be performed separately in different locations. As before, the Acquisition Modality would be used to acquire scan data. The analysis can then be done at a separate Review Station. The Review Station is the CIRRUS HD-OCT Application Software installed

Copyright: © Carl Zeiss Meditec ,Inc.

on a computer, other than the Acquisition Modality. The Review Station needs access to the Application Entity, to which the Acquisition Modality archives scan data and default analysis parameters.

The Acquisition Modality would work as described in the chapter before. In the following sequence diagram the focus is on the functionality of the Review Station.

Figure 4-4 - Acquisition Modality and Review Station

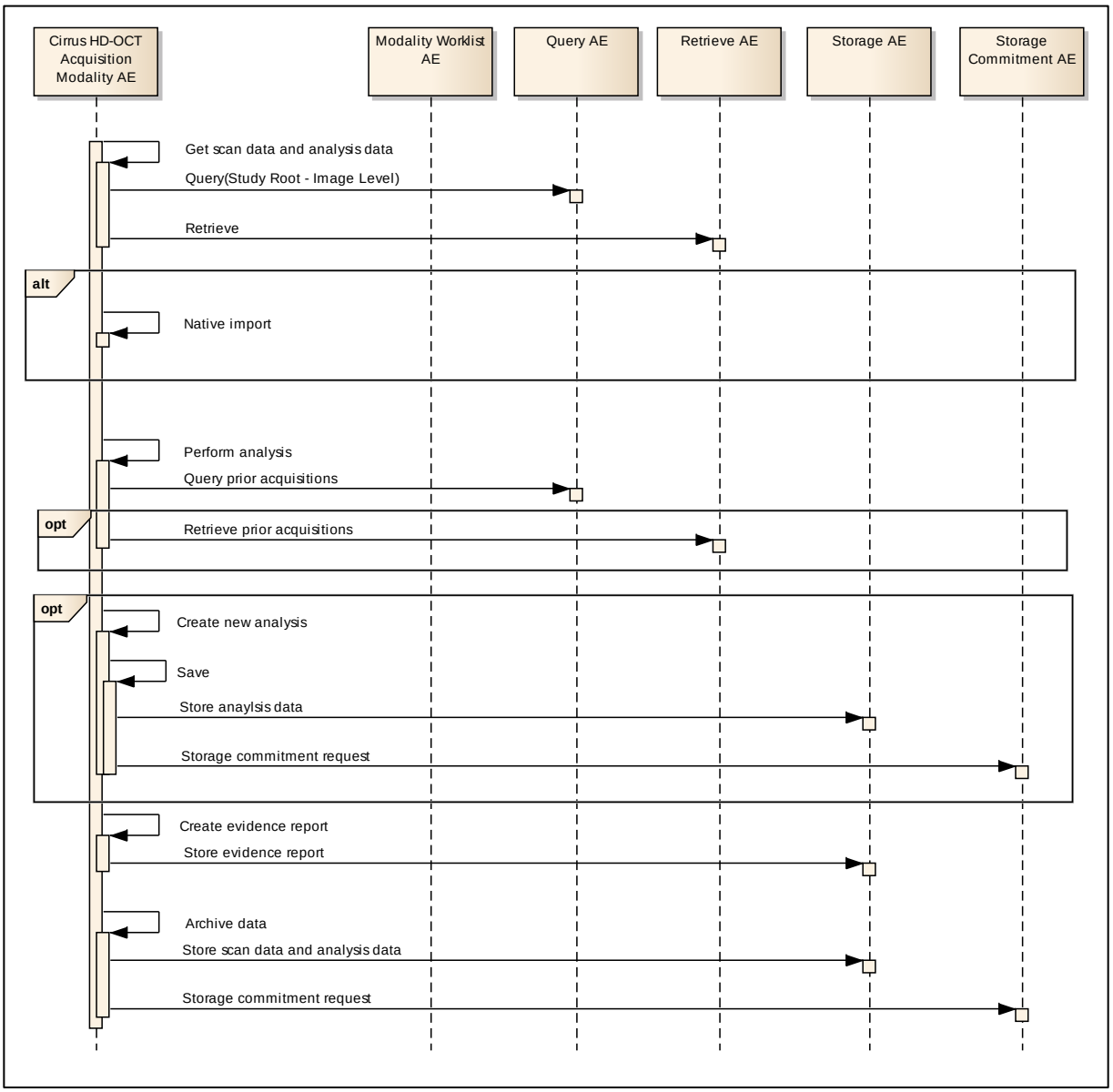

Copyright: © Carl Zeiss Meditec ,Inc.

4.1.3.4 Unscheduled case

Figure 4-5 Unscheduled Case with Acquisition Modality

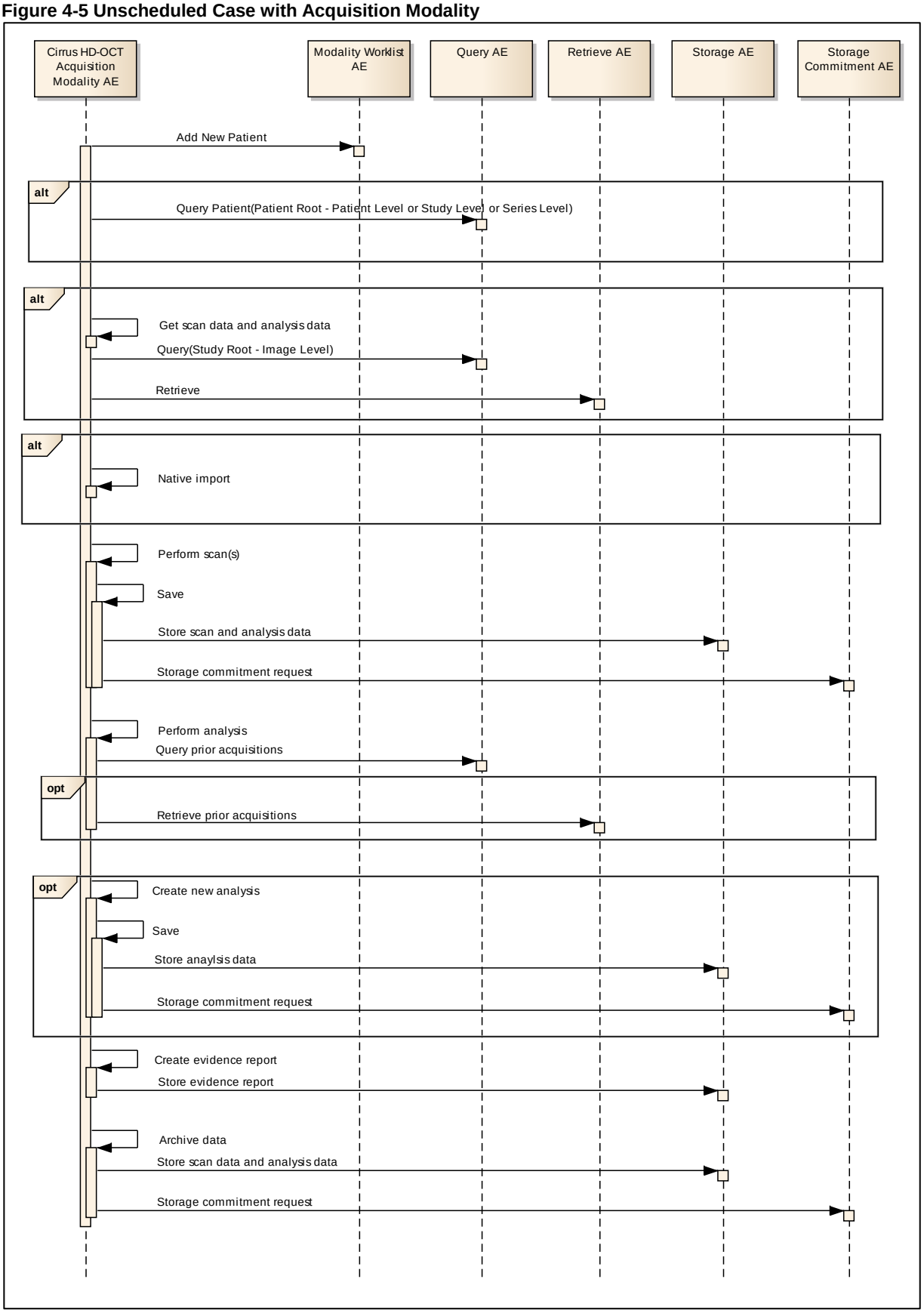

Copyright: © Carl Zeiss Meditec ,Inc.

In the unscheduled case the patient arrives immediately at the instrument and has not been registered at the front desk. Thus the examination is not scheduled in advance and cannot be provided via the Modality Worklist. Patient demographics and study specific information has to be entered at the instrument itself.

The situation is akin to the case if the Modality Worklist SCP could not be reached due to network issues. In case the Archive's Query Service Provider is available the operator could also query the Archive for patient information. However, this should be considered as an exceptional way to obtain patient demographics.

4.2 AE Specifications

4.2.1 CIRRUS HD-OCT Acquisition Modality AE Specification

4.2.1.1 SOP Classes

Table 4-2 SOP Classes for CIRRUS HD-OCT AE

SOP Class Name	SOP Class UID	SCU	SCP
Verification	1.2.840.10008.1.1	Yes	Yes
Storage Commitment Push Model SOP Class	1.2.840.10008.1.20.1	Yes	No
Encapsulated PDF Storage	1.2.840.10008.5.1.4.1.1.104.1	Yes	No
Raw Data Storage	1.2.840.10008.5.1.4.1.1.66	Yes	Yes
Study Root Query/Retrieve Information Model – FIND	1.2.840.10008.5.1.4.1.2.2.1	Yes	No
Patient Root Query/Retrieve Information Model - FIND	1.2.840.10008.5.1.4.1.2.1.1	Yes	No
Modality Worklist Information Model - FIND	1.2.840.10008.5.1.4.31	Yes	No
Study Root Query/Retrieve Information Model – MOVE	1.2.840.10008.5.1.4.1.2.2.2	Yes	No
Ophthalmic Tomography Image Storage	1.2.840.10008.5.1.4.1.1.77.1.5.4	Yes	No
Ophthalmic Photography 8 Bit Image Storage	1.2.840.10008.5.1.4.1.1.77.1.5.1	Yes	No

Note 1: The networking interface proposes more presentation contexts than actually supported by the application. All lines in grey are not supported by the CIRRUS HD-OCT.

4.2.1.2 Associations Policies

4.2.1.2.1 General

The DICOM standard Application Context Name for DICOM 3.0 is always proposed:

Table 4-3 DICOM Application Context

Application Context Name	1.2.840.10008.3.1.1.1

4.2.1.2.2 Number of Associations

The number of simultaneous associations can be two. At a time there may be one outgoing association and one incoming association.

Table 4-4 Number of associations

Maximum number of simultaneous associations	2

Copyright: © Carl Zeiss Meditec ,Inc.

4.2.1.2.3 Asynchronous Nature

CIRRUS HD-OCT Application Software does not support asynchronous communication (multiple outstanding transactions over a single Association).

4.2.1.2.4 Implementation Identifying Information

Table 4-5 DICOM implementation class and version

Implementation Class UID	1.2.276.0.75.2.5.20
Implementation Version Name	NIM-2.6.2

4.2.1.3 Association Initiation Policy

4.2.1.3.1 Activity – Verify Communication

4.2.1.3.1.1 Description and Sequencing of Activities

This activity is available during the configuration phase. It facilitates the setup and management of the DICOM Application Entities.

The user can test the application level communication between instrument's software Application Entity and its peer DICOM Application Entities. During one test call, all peer DICOM Application Entities are contacted.

In the association request CIRRUS HD-OCT Application Software proposes not only Verification SOP Class, but also all other SOP Classes as supported by the instrument's DICOM interface.

The association is established when the peer DICOM entity accepts the verification related presentation context. In a sub-sequent step a C-ECHO message is exchanged.

The results of the "Verify Communication" activity are shown to the user as success or failure. For e. g. a Storage Provider not only the Verification information is evaluated, but also the acceptance of the proposed presentation context comprising the respective Storage SOP Classes.

4.2.1.3.1.2 Proposed Presentation Contexts

Following presentation contexts are offered for each initiated association. During this activity the Application Software uses only

- Verification" with Transfer Syntax ILE

Table 4-6 Proposed Presentation Contexts for Activity Verify Communication

Presentation Context Table					
Abstract Syntax		**Transfer Syntax**		**Role**	**Ext. Neg.**
Name	**UID 1.2.840.10008. ...**	**Name List**	**UID List 1.2.840.10008. ...**		
Verification	1.1	ILE	1.2	SCU	No
Modality Worklist IM - FIND	5.1.4.31	ILE	1.2	SCU	No
Study Root Q/R IM - FIND	5.1.4.1.2.2.1	ILE	1.2	SCU	Yes Note 1
Study Root Q/R IM - MOVE	5.1.4.1.2.2.2	ILE	1.2	SCU	No
Patient Root Q/R IM – FIND	5.1.4.1.2.1.1	ILE	1.2	SCU	Yes Note 1
Encapsulated PDF Storage	5.1.4.1.1.104.1	ILE	1.2	SCU	No
		ELE	1.2.1	SCU	No
Raw Data Storage	5.1.4.1.1.66	ILE	1.2	SCU	No

Copyright: © Carl Zeiss Meditec ,Inc.

		ELE	1.2.1	SCU	No
OP 8 Bit Image Storage	5.1.4.1.1.77.1.5.1	JPG-1	1.2.4.50	SCU	No
		MPEG2	1.2.4.100	SCU	No
		J2K	1.2.4.91	SCU	No
		J2K-LL	1.2.4.90	SCU	No
OPT Image Storage	5.1.4.1.1.77.1.5.4	J2K	1.2.4.91	SCU	No
		J2K-LL	1.2.4.90	SCU	No
Multi-frame True Color Secondary Capture Image Storage	5.1.4.1.1.7.4	RLE	1.2.5	SCU	No
		JPG-1	1.2.4.50	SCU	No
Storage Commitment Push Model	1.20.1	ILE	1.2	SCU	No

Note 1: C-FIND extended negotiation is offered. Relational-query support is required by the SCP.

Note 2: The networking interface proposes more presentation contexts than actually supported by the application. All lines in grey are not supported by the CIRRUS HD-OCT

4.2.1.3.1.3 SOP Specific Conformance for Verification SOP Class

The CIRRUS HD-OCT Application Software provides standard conformance.

4.2.1.3.2 Activity – Query Modality Worklist

4.2.1.3.2.1 Description and Sequencing of Activities

Option “Todays Patients query”

In this case, the Application Software performs a query with predefined query keys. The operator cannot change the query key values. The applied query keys are:

Table 4-7 Modality Worklist Query for Today's Patients

Tag	Attribute Name	Description
(0040,0100)	Scheduled Procedure Step Sequence	
>(0040,0001)	Scheduled Station Application Entity Title	Uses the value as configured in system preferences for the CIRRUS HD-OCT instrument .
>(0040,0002)	Scheduled procedure Step Start Date	Uses the date of today.

All matching worklist items are subject to be imported into the local database.

Sequentially a broad Patient Root Query on Study level on the query key of today’s Study Date (0008,0020) follows which results in listing all Patients with existing studies from today’s date.

Copyright: © Carl Zeiss Meditec ,Inc.

Figure 4-6 Modality Worklist - Today's Patient Query

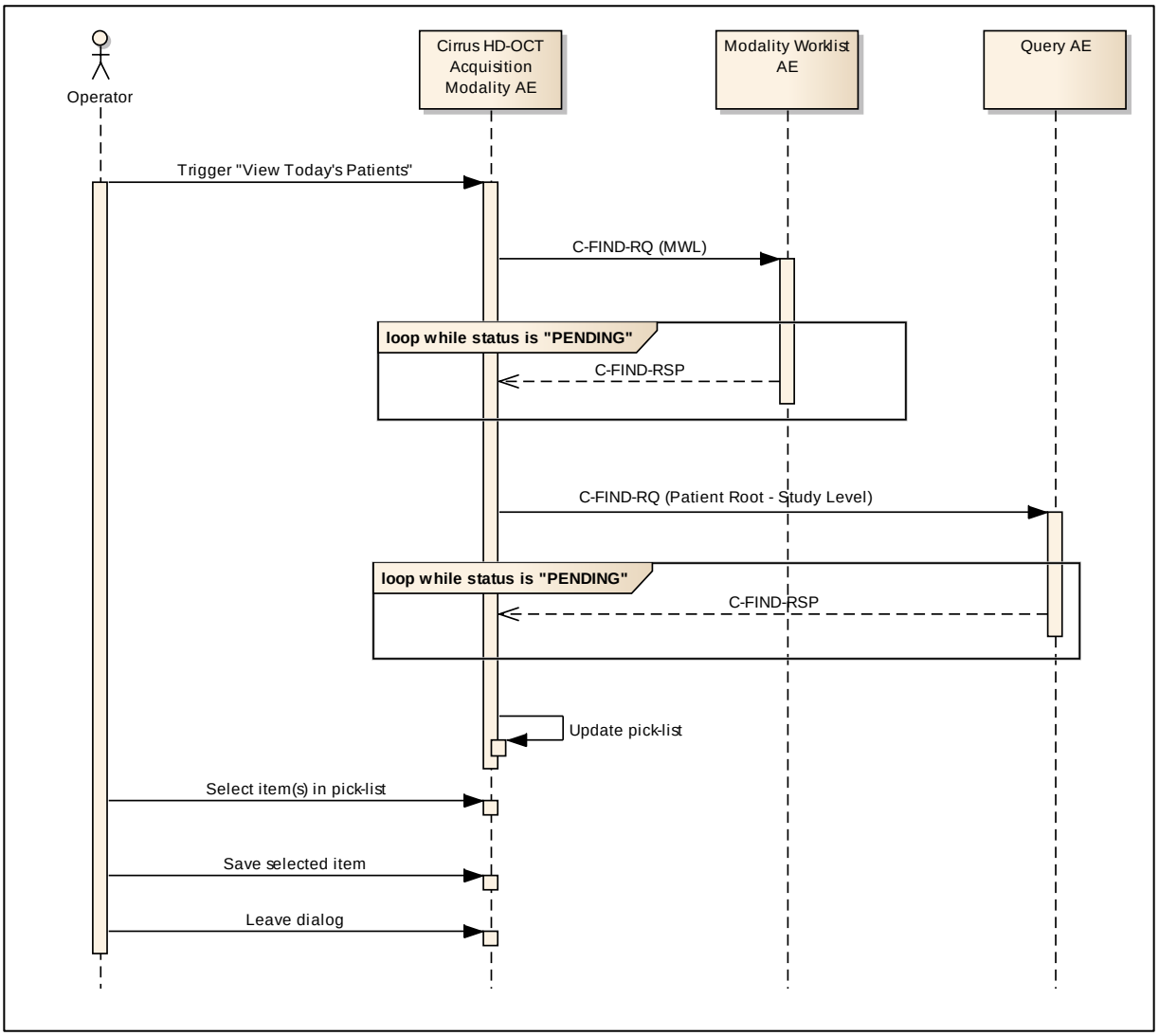

Copyright: © Carl Zeiss Meditec ,Inc.

Option “Interactive query”

Figure 4-7 - Modality Worklist - interactive query

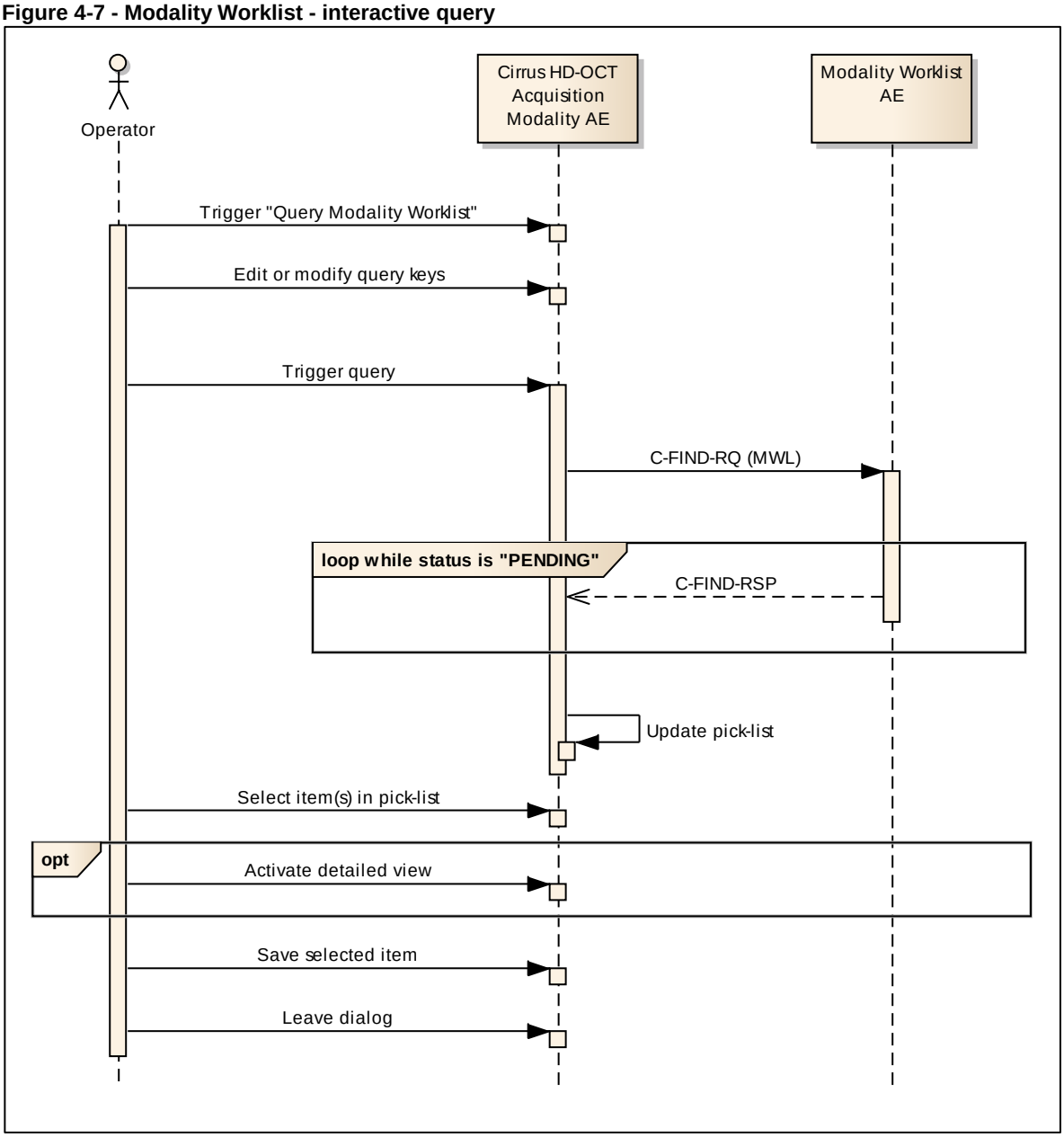

Trigger “Modality Worklist”

The activity “Query Modality Worklist” can be triggered by the operator at any time if no other activity is in progress. It is meaningful to perform the query when the patient arrives at the modality. Then the worklist contains latest information.

Edit or modify query keys

The Modality Worklist query offers a GUI for interactive query. The GUI offers two sets of query keys. One set belongs to the so called "Patient Based Query", the other one belongs to the "Broad Query".

The operator can change or fill in search criteria in the shown dialog. For instance, the incomplete patient name or the patient ID can be used. For more details on supported query keys see Table 4-11 Modality Worklist query key details - Patient Based Query and Table 4-12 Modality Worklist query key details - Broad Query.
If the operator likes to use wildcards he may manually add the following wildcard

Copyright: © Carl Zeiss Meditec ,Inc.

characters:
* signifies any number of characters (including none)

? signifies any one character

The application doesn't add wildcards automatically neither at the end of the search string nor at the beginning.

Trigger query

The operator triggers the search after he or she filled in search criteria. The Application Software sends a DICOM C-FIND request, which contains the search criteria. The Application Software waits for the response from the partner Application Entity. Application Software will accept up to a configurable number of matches. The Application Software checks whether the number of received worklist items overstepped the configurable limit. If the number of received worklist items overstepped the limit, then the Application Software sends a C-CANCEL-RQ, then an A-RELEASE-RQ to the service provider and a message is displayed. Despite this warning, the operator gets result in the pick-list.

After receiving the response, the pick-list is updated. The pick-list provides the most important information for a quick overview (see Table 4-10 Attributes involved in Modality Worklist C-FIND request and response for the supported set of tags).

The operator can start over, redefine query keys and trigger the query again. This can be performed as often as required, until he or she finds the correct worklist item.

Select item in pick-list

The operator can select one worklist item in the pick-list. The selected item becomes subject for a detailed view or it can be imported into the Application Software.

Activate detailed view

The detailed view allows a closer look to the currently selected worklist item. Thus the operator can see more information about patient information and schedule information (see Table 4-10 Attributes involved in Modality Worklist C-FIND request and response for the supported set of tags).

Save selected item

The operator can take over the selected item at any time. The data is stored in the list of today's patients.

The Application Software checks the local database for patient data with same combination of Patient ID and Issuer of Patient ID. If there is matching data, then the Application Software checks for differences in Patient's Name, Patient's Birth Date and Patient's Sex. In case of a difference, the Application Software presents the differences to the operator and asks whether to overwrite the data in the local database with the data from the Modality Worklist. The operator can also deny overwriting. For patients who do not relate to existing data, the Application Software prepares new data sets.

After saving the selected item, the operator can start over. By repeating this process the operator can take over several worklist items into the local database.

After all that, the operator can start the examination of the patient and acquire scan data.

Leave dialog

The operator finally finishes the worklist query by leaving the dialog.

Multi Component Group Names Handling

The CIRRUS HD-OCT is capable to deal with the first component group of multi-component group names. When the operator triggers a search of a worklist containing multi-component group names the search will be performed using the first component group only. When the response from the modality worklist provider contains a multi-component group name the pick list will show only the first component group and the first component group information will be imported at the modality. An empty first component group in the worklist will result in an empty Patient Name attribute in the created DICOM IODs. The second and third component groups are ignored.

Copyright: © Carl Zeiss Meditec ,Inc.

Note: Cirrus does not support multiple Scheduled Procedure Steps for the same requested procedure. It adapts the first scheduled procedure step in the receiving order.

4.2.1.3.2.2 Proposed Presentation Contexts

Following presentation contexts are offered for each initiated association. During this activity the Application Software uses only

- "Modality Worklist IM - FIND" with Transfer Syntax ILE

Table 4-8 Proposed Presentation Contexts for Activity Query Modality Worklist

Presentation Context Table					
Abstract Syntax		**Transfer Syntax**		**Role**	**Ext. Neg.**
Name	**UID 1.2.840.10008. ...**	**Name List**	**UID List 1.2.840.10 008. ...**		
Verification	1.1	ILE	1.2	SCU	No
Modality Worklist IM - FIND	5.1.4.31	ILE	1.2	SCU	No
Study Root Q/R IM – FIND	5.1.4.1.2.2.1	ILE	1.2	SCU	Yes See Note 1
Study Root Q/R IM - MOVE	5.1.4.1.2.2.2	ILE	1.2	SCU	No
Patient Root Q/R IM – FIND	5.1.4.1.2.1.1	ILE	1.2	SCU	Yes See Note 1
Modality Performed Procedure Step	3.1.2.3.3	ILE	1.2	SCU	No
Modality Performed Procedure Step Notification	3.1.2.3.5	ILE	1.2	SCU	No
Encapsulated PDF Storage	5.1.4.1.1.104.1	ILE	1.2	SCU	No
		ELE	1.2.1	SCU	No
Raw Data Storage	5.1.4.1.1.66	ILE	1.2	SCU	No
		ELE	1.2.1	SCU	No
OP 8 Bit Image Storage	5.1.4.1.1.77.1.5.1	JPG-1	1.2.4.50	SCU	No
		MPEG2	1.2.4.100	SCU	No
		J2K	1.2.4.91	SCU	No
		J2K-LL	1.2.4.90	SCU	No
OPT Image Storage	5.1.4.1.1.77.1.5.4	J2K	1.2.4.91	SCU	No
		J2K-LL	1.2.4.90	SCU	No
Multi-frame True Color Secondary Capture Image Storage	5.1.4.1.1.7.4	RLE	1.2.5	SCU	No

Copyright: © Carl Zeiss Meditec ,Inc.

		JPG-1	1.2.4.50	SCU	No
Storage Commitment Push Model	1.20.1	ILE	1.2	SCU	No

Note 1: C-FIND extended negotiation is offered. Relational-query support is required by the SCP.

Note 2: The networking interface proposes more presentation contexts than actually supported by the application. All lines in grey are not supported by the CIRRUS HD-OCT

4.2.1.3.2.3 SOP Specific Conformance for Modality Worklist SOP Class

Table 4-9 Modality Worklist C-FIND Response Status Handling Behavior

Service Status	Further Meaning	Error Code	Behavior
Success	Matching is complete	0000	The Software Application stops receiving worklist items. It finally updates the pick list.
Pending	Matches are continuing	FF00, FF01	The Application Software checks whether the number of received worklist items overstepped the configurable limit. If the number of received worklist items overstepped the limit, then the Application Software sends a C-CANCEL-RQ, then an A-RELEASE-RQ to the service provider and a message is displayed.
Failure	Too Many Results	C001	If there are too many results the CIRRUS HD-OCT application software throws a warning message “DICOM search returned too many records. Please narrow search” to the user and the status box is changed to yellow.
*	*	Any other status code	The user gets an error message.

Table 4-10 Attributes involved in Modality Worklist C-FIND request and response

Tag	Tag Name	Query Key	Imported	Displayed	Modifiable	SOP Instance
Scheduled Procedure Step (SPS)						
(0040,0100)	Scheduled Procedure Step Sequence					
>(0040,0001)	Scheduled Station Application Entity Title	BRQ, DEF		PLD		
>(0040,0003)	Scheduled Procedure Step Start Time			PLD		
>(0040,0002)	Scheduled Procedure Step Start Date	BRQ, DEF		PL, PLD		
>(0008,0060)	Modality	BRQ, DEF		PLD		
>(0040,0006)	Scheduled Performing Physicians Name					
>(0040,0007)	Scheduled Procedure Step Description			PL, PLD		
>(0040,0010)	Scheduled Station Name					
>(0040,0011)	Scheduled Procedure Step Location					
>(0040,0008)	Scheduled Protocol Code Sequence					
>>(0008,0100)	Code Value					

Copyright: © Carl Zeiss Meditec ,Inc.

>>(0008,0102)	Coding Scheme Designator					
>>(0008,0103)	Coding Scheme Version					
>>(0008,0104)	Code Meaning			PLD		
>(0040,0012)	Pre-Medication					
>(0040,0009)	Scheduled Procedure Step ID					
>(0032,1070)	Requested Contrast Agent					
Requested Procedure						
(0040,1001)	Requested Procedure ID	PBQ	X	PL, PLD		X
(0032,1060)	Requested Procedure Description		X	PLD		X
(0032,1064)	Requested Procedure Code Sequence					
>(0008,0100)	Code Value					
>(0008,0102)	Coding Scheme Designator					
>(0008,0103)	Coding Scheme Version					
>(0008,0104)	Code Meaning			PLD		
(0020,000D)	Study Instance UID		X			X
(0008,1110)	Referenced Study Sequence					
>(0008,1150)	Referenced SOP Class UID					
>(0008,1155)	Referenced SOP Instance UID					
(0040,1003)	Requested Procedure Priority					
(0040,1004)	Patient Transport Arrangements					
(0040,1400)	Requested Procedure Comments			PLD		
Imaging Service Request						
(0008,0050)	Accession Number	PBQ	X	PL, PLD		X
(0032,1032)	Requesting Physician					
(0008,0090)	Referring Physicians Name		X	PLD		X
Visit Identification						
(0038,0010)	Admission ID					
Visit Status						
(0038,0300)	Current Patient Location					
Visit Relationship						
(0008,1120)	Referenced Patient Sequence					
>(0008,1150)	Referenced SOP Class UID					
>(0008,1155)	Referenced SOP Instance UID					
Patient Identification						
(0010,0010)	Patients Name	PBQ	X	PL, PLD, APP		X
(0010,0020)	Patients ID	PBQ	X	PL, PLD, APP		X
(0010,0021)	Issuer of Patient ID		X			X
(0010,1000)	Other Patient IDs					X
Patient Demographic						
(0010,0030)	Patients Birth Date		X	PLD, APP		X
(0010,0040)	Patients Sex		X	PLD, APP		X
(0010,1030)	Patients Weight					

Copyright: © Carl Zeiss Meditec ,Inc.

(0040,3001)	Confidentiality Constraint on Patient Data Description					
(0010,4000)	Patients Comments		X			X
Patient Medical						
(0038,0500)	Patient State					
(0010,21C0)	Pregnancy Status					
(0010,2000)	Medical Alerts					
(0038,0050)	Special Needs					

Values of column "Query Key":

PBQ

A tag that is marked with PBQ is used as query key in the Patient Based Query mode of the interactive Modality Worklist Query Dialog.

BRQ

A tag that is marked with BRQ is used as query key in the Broad Query mode of the interactive Modality Worklist Query Dialog.

DEF

A tag that is marked with DEF has a value assigned when the interactive Modality Worklist Query Dialog is shown the first time or when the Reset button is pushed.

Default values can get modified. The modifications will be stored for next use of Modality Worklist Query Dialog.

Values of column "Imported":

X

The value gets imported in the application. Thus this value may have influence in Information Objects which will be created as a result of the performed examination.

Values of column "Displayed":

PL

Values of this tag are instantly visible in the pick list.

PLD

Values of this tag are visible in the details dialog of the current selected pick list item.

APP

Values of this tag are visible in the application.

Values of column "Modifiable":

X

A value which has been imported to the application might be modified inside the application.

Values of column SOP Instance:

X

Values of marked tags will be stored in created SOP Instances. See also table "mapping of attributes" in 8.1.3 Attribute Mapping.

Following set of tags can be used as query key in the so called "**Patient Based Query**". The Patient Based Query is a working mode of the Modality Worklist Query Dialog.

Table 4-11 Modality Worklist query key details - Patient Based Query

Tag	Tag Name	Description
(0010,0010)	Patients Name	The CIRRUS HD-OCT Application Software supports family name and given name only. The operator can use '*' or '?' as wild cards.
(0010,0020)	Patient ID	The operator can enter a string which conforms to the Value Representation LO.
(0008,0050)	Accession Number	The operator can enter a string which conforms to the

Copyright: © Carl Zeiss Meditec ,Inc.

		Value Representation SH.
(0040,1001)	Requested Procedure ID	The operator can enter a string which conforms to the Value Representation SH.

Following set of tags can be used as query key in the so called "**Broad Query**". The Broad Query is a working mode of the Modality Worklist Query Dialog.

Table 4-12 Modality Worklist query key details - Broad Query

Tag	Tag Name	Description
(0040,0100)	Scheduled Procedure Step Sequence	This attribute is the container for the tags as listed below. The sequence contains one item.
>(0040,0002)	Scheduled Procedure Step Start Date	The default value is today's date. The operator can change the value and can even enter date ranges. It is also possible to search for all dates if the operator activates a check box.
>(0008,0060)	Modality	The default value is "OPT". The operator can change the value and select one value of a predefined set of values including an empty string. Possible values are "OP", "OPM", "OPT", "OPV", "OT" and empty string.
>(0040,0001)	Scheduled Station AE Title	The default value is set by configuration. The operator can enter the AE Title of another device or leave the field empty.

Copyright: © Carl Zeiss Meditec ,Inc.

4.2.1.3.3 Activity - Get scan data and analysis data

4.2.1.3.3.1 Description and Sequencing of Activities

Figure 4-8 - Retrieve scan and analysis data

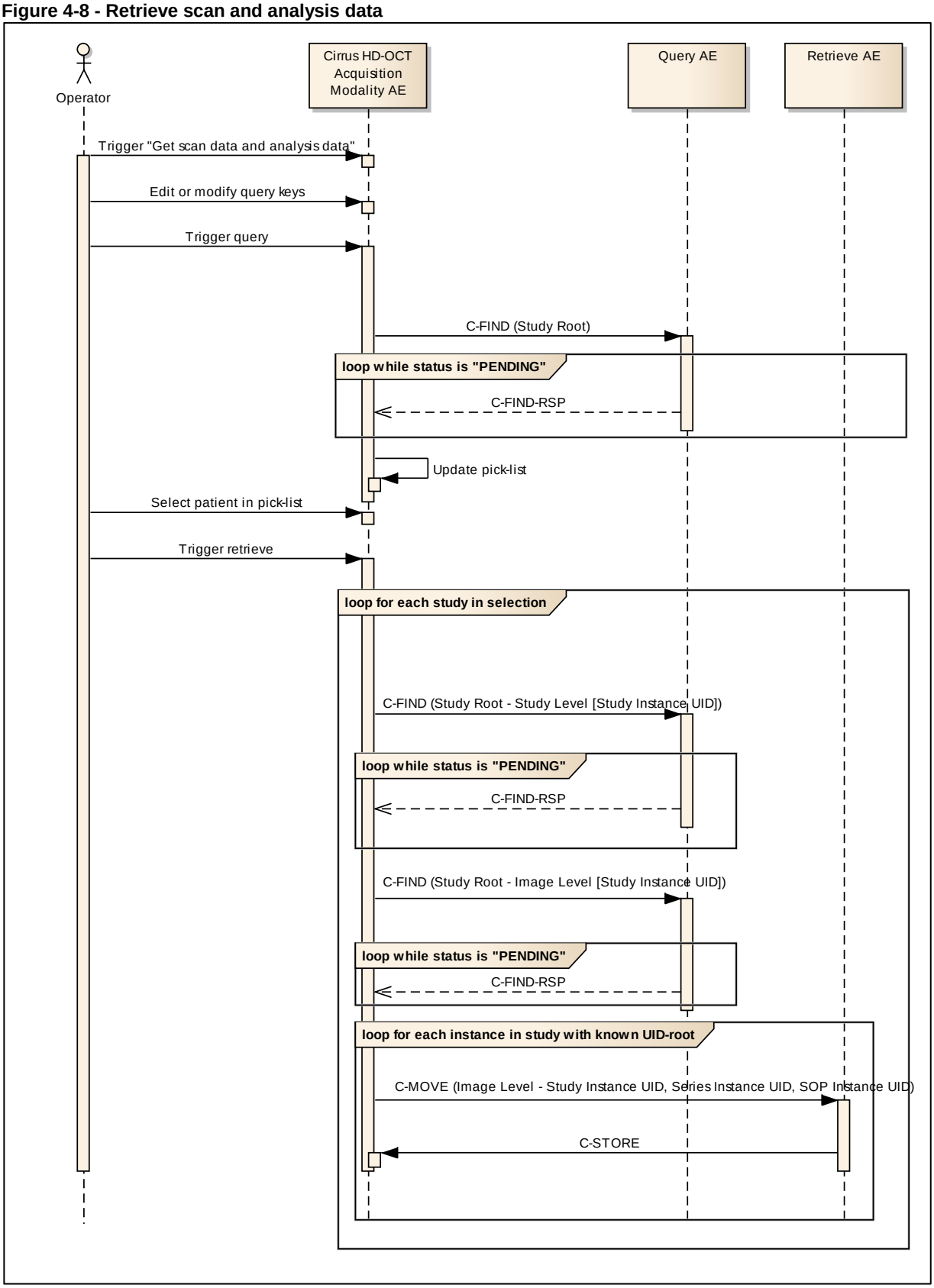

Copyright: © Carl Zeiss Meditec ,Inc.

Trigger "Get scan data and analysis data"

The activity "Get scan data and analysis data" can be triggered by operator at any time if no other activity is in progress.

Edit or modify query keys

This activity offers a GUI for interactive query. The GUI allows the user to specify values for the query keys other than the default values. See Table 4-19 Query key details

Trigger query

After specifying the query keys he or she triggers the query. All query keys apply on study level. Thus, all results are about matching studies. The number of matches is limited to a configurable number. If the number of matches oversteps that limit, the Application Software sends a C-CANCEL-RQ, then an A-RELEASE-RQ and a dialog shows up, notifying the operator about this limitation.

Select patient in pick-list

During updating the pick-list, studies are collated so that the operator can select a patient rather than studies. The resulting list of patients is shown to the operator. He can then select one single patient. If the operator cannot find the patient he or she is looking for, he or she can immediately repeat the query, using other values as search criteria.

Trigger retrieve

By clicking on "Retrieve", the operator tells the Software Application to retrieve studies of the current selected patient.

The Software Application checks the local database for patient data with same combination of Patient ID and Issuer of Patient ID. If there is matching data, then the Application Software checks for differences in Patient's Name, Patient's Birth Date and Patient's Sex. In case of a difference, the Application Software presents the differences to the operator and asks whether to overwrite the data in the local database with the data from the Query. The operator can also deny overwriting. In this case, the retrieve process is aborted.

If there was no matching data for the combination of Patient ID and Issuer of Patient ID, the Application Software checks whether the local database contains data that matches the Study of the selected patient. The value of Study Instance UID is used as identifier by Software Application. In case of a match, the Application Software prompts whether to overwrite the patient data in the local database with the data as given by the Query. The operator can also deny overwriting.

After checking the patient demographics, the Application Software explores each study for its Instances by performing a Study Root Query on Study Level and sequentially on Image Level . By doing so, the Application Software gathers all SOP Instance UIDs that relate to the patient.

The Application Software filters the Instances for supported SOP Class UIDs and SOP Instance UIDs with a known UID-root.

The Application Software filters SOP Instances …

… for SOP Class UIDs
1.2.840.10008.5.1.4.1.1.66 - Raw Data Storage

… for the UID-roots
1.2.276.0.75.2.2.40, 1.2.276.0.75.2.2.42 (CIRRUS HD-OCT Model 4000 and Model 5000)
1.2.276.0.75.2.2.41, 1.2.276.0.75.2.2.43 (CIRRUS HD-OCT Model 400 and Model 500)
1.2.826.0.1.3680043.2.139.3.6 – UID-root of legacy CIRRUS data

1.2.276.0.75.2.1.50, 1.2.276.0.75.2.1.51 (CIRRUS photo 600, CIRRUS photo 800)

Instances that match these filters are finally retrieved.

Copyright: © Carl Zeiss Meditec ,Inc.

In case the Query/Retrieve is performed via DICOM Query and Retrieve UI the query algorithm works hierarchical and the Query SCP does not require to support relational queries.

4.2.1.3.3.2 Proposed Presentation Contexts

Following presentation contexts are offered for each initiated association. During this activity the Application Software uses only

- Study Root Q/R IM - FIND" with Transfer Syntax ILE
- Study Root Q/R IM - MOVE" with Transfer Syntax ILE
- Raw Data Storage" with Transfer Syntax ELE or ILE

Table 4-13 Proposed Presentation Contexts for Activity Get scan data and analysis data

Presentation Context Table					
Abstract Syntax		**Transfer Syntax**		**Role**	**Ext. Neg.**
Name	**UID 1.2.840.10008. ...**	**Name List**	**UID List 1.2.840.10008. ...**		
Verification	1.1	ILE	1.2	SCU	No
Modality Worklist IM - FIND	5.1.4.31	ILE	1.2	SCU	No
Study Root Q/R IM - FIND	5.1.4.1.2.2.1	ILE	1.2	SCU	Yes See Note 1
Study Root Q/R IM - MOVE	5.1.4.1.2.2.2	ILE	1.2	SCU	No
Patient Root Q/R IM – FIND	5.1.4.1.2.1.1	ILE	1.2	SCU	Yes See Note 1
Modality Performed Procedure Step	3.1.2.3.3	ILE	1.2	SCU	No
Modality Performed Procedure Step Notification	3.1.2.3.5	ILE	1.2	SCU	No
Encapsulated PDF Storage	5.1.4.1.1.104.1	ILE	1.2	SCU	No
		ELE	1.2.1	SCU	No
Raw Data Storage	5.1.4.1.1.66	ILE	1.2	SCU	No
		ELE	1.2.1	SCU	No
OP 8 Bit Image Storage	5.1.4.1.1.77.1.5.1	JPG-1	1.2.4.50	SCU	No
		MPEG 2	1.2.4.100	SCU	No
		J2K	1.2.4.91	SCU	No
		J2K-LL	1.2.4.90	SCU	No
OPT Image Storage	5.1.4.1.1.77.1.5.4	J2K	1.2.4.91	SCU	No
		J2K-LL	1.2.4.90	SCU	No
Multi-frame True Color Secondary Capture Image Storage	5.1.4.1.1.7.4	RLE	1.2.5	SCU	No
		JPG-1	1.2.4.50	SCU	No
Storage Commitment Push Model	1.20.1	ILE	1.2	SCU	No

Note 1: C-FIND extended negotiation is offered. Relational-query support is required by the SCP.

Note 2: The networking interface proposes more presentation contexts than actually supported by the application. All lines in grey are not supported by the CIRRUS HD-OCT.

Copyright: © Carl Zeiss Meditec ,Inc.

4.2.1.3.3.3 SOP Specific Conformance for Study Root Query/Retrieve SOP Class as SCU

Table 4-14 Query C-FIND Response Status Handling Behavior

Service Status	Further Meaning	Error Code	Behavior
Success	Matching is complete No final Identifier is supplied.	0000	The Application Software finishes receiving query results. It finally updates the pick list.
Pending	Matches are continuing	FF00, FF01	The Application Software checks whether the number of received responses overstepped the configurable limit. If the number of received responses overstepped the limit, then the Application Software sends a C-CANCEL-RQ, then an A-RELEASE-RQ to the service provider and a message is displayed.
Refused	Out of Resources	A700	An error message is shown to the operator. The Application Software logs this event and gives up. The pick-list is then empty.
Failure	Identifier does not match SOP Class	A900	
Failure	Unable to process	C000 - CFFF	
Cancel	Matching terminated due to Cancel request	FE00	
*	*	Any other status code	

Table 4-15 Retrieve C-MOVE Response Status Handling Behavior

Service Status	Further Meaning	Error Code	Behavior
Success	Sub-operations Complete No Failures	0000	The Application Software returns from this activity.
Pending	Sub-operations are continuing	FF00	This is not expected since the Application Software calls C-MOVE instance by instance.
Refused	Out of Resources Unable to calculate number of matches	A701	An error message is shown to the operator. The Application Software logs this event and continues with processing next C-MOVE operation.
Refused	Out of Resources Unable to perform sub-operations	A702	
Refused	Move Destination unknown	A801	
Failure	Identifier does not match SOP Class	A900	
Failure	Unable to process	C000 - CFFF	
Success	Sub-operations Complete One or more	B000	

Copyright: © Carl Zeiss Meditec ,Inc.

	Failures		
Cancel	Sub-operations terminated due to Cancel Indication	FE00	
*	*	Any other status code	

The following table lists attributes, which are in use during this activity. The table also explains how the attributes are involved.

Table 4-16 STUDY level keys for the Study Root Query/Retrieve Information Model (request and response)

Tag	Tag Name	Query Key	Imported	Displayed in pick-list	Displayed in details
(0010,0010)	Patient's Name	X	X	X	X
(0010,0020)	Patient ID	X	X	X	X
(0010,0021)	Issuer of Patient ID		X	X	X
(0010,0030)	Patient's Birth Date		X	X	X
(0010,0040)	Patient's Sex		X		X
(0010,1000)	Other Patient IDs				
(0010,2160)	Ethnic Group				
(0010,4000)	Patient Comments				
(0008,0020)	Study Date	X, DEF, RNG	X		X
(0008,0030)	Study Time		X		
(0008,0050)	Accession Number	X	X		X
(0020,0010)	Study ID	X	X		X
(0020,000D)	Study Instance UID		X		
(0008,1030)	Study Description		X		X
(0008,0061)	Modalities in Study	X, DEF, SEL			X
(0008,0090)	Referring Physician's Name	X	X		X
(0008,1080)	Admitting Diagnoses Description				

Table 4-17 SERIES level keys for the Study Root Query/Retrieve Information Model (request and response)

Tag	Tag Name	Query Key	Imported	Displayed in pick-list	Displayed in details
(0008,0060)	Modality				
(0020,0011)	Series Number				
(0020,000E)	Series Instance UID				
(0008,103E)	Series Description				

Copyright: © Carl Zeiss Meditec ,Inc.

(0040,0275)	Request Attributes Sequence				
> (0040,1001)	Requested Procedure ID				
> (0040,0009)	Scheduled Procedure Step ID				
(0040,0244)	Performed Procedure Step Start Date				
(0040,0245)	Performed Procedure Step Start Time				
(0008,0021)	Series Date				
(0008,0031)	Series Time				
(0020,0060)	Laterality				
(0008,1050)	Performing Physician's Name				
(0008,1090)	Manufacturer's Model Name				

Table 4-18 Keys for the Study Root Query/Retrieve Information Model (request and response) on INSTANCE level:

Tag	Tag Name	Query Key	Imported
(0020,0013)	Instance Number		
(0008,0018)	SOP Instance UID		
(0042,0010)	Document Title		
(0008,0016)	SOP Class UID	X	
(0008,0012)	Instance Creation Date		
(0008,0013)	Instance Creation Time		
(0008,002A)	Acquisition Datetime		
(0020,0062)	Image Laterality		
(0008,0008)	Image Type		
(0008,114A)	Referenced Instance Sequence		
>(0008,1150)	Referenced SOP Class UID		
>(0008,1155)	Referenced SOP Instance UID		
>(0040,A170)	Purpose of Reference Code Sequence		
>> (0008,0100)	Code Value		
>> (0008,0102)	Coding Scheme Designator		
>> (0008,0103)	Coding Scheme Version		
>> (0008,0104)	Code Meaning		
>> (0008,010F)	Context Identifier		
>> (0008,0117)	Context UID		
>> (0008,0105)	Mapping Resource		
>> (0008,0106)	Context Group Version		
>> (0008,010B)	Context Group Extension Flag		
>> (0008,0107)	Context Group Local Version		

Copyright: © Carl Zeiss Meditec ,Inc.

>> (0008,010D)	Context Group Extension Creator UID		
(0405,XX01)	Pattern Type		
(0405,XX1A)	Signal Strength		
(0407,XXA1)	OCT Cube Sequence		

Values for column "Query key":

X

The attribute is used as query key. The operator can assign values to that attribute. When the operator triggers the query, the values of the query keys are transferred to the Query Service Provider. How the Query Service Provider interprets the given value is out of scope of this document.

DEF

A default value other than empty string is defined for this attribute.

RNG

The operator can apply a range as value for the query key.

SEL

The operator can select a value from a given list of values.

APP

The query key is filled by the application software.

Values of column "Imported":

X

The value gets imported in the application. Thus this value may have influence in Information Objects which will be created as a result of the performed examination.

Values for column "Displayed in pick-list":

X

After receiving query results, the value of this attribute is shown in the pick-list.

Values for column "Displayed in detail dialog":

X

The value of this attribute becomes visible in the detail dialog. The detail dialog shows attributes of the current selected item in the pick-list.

Table 4-19 Query key details

Tag	Tag Name	Description
(0008,0050)	Accession Number	The default value is empty string. The operator can enter each value that conforms to the Value Representation SH. This is a DICOM Standard query key on Study level.
(0008,0020)	Study Date	By default, this query key is disabled, thus, the resulting DICOM query key value is empty string. When enabled, the default value is today's date. The operator can enable or disable this query key and can change the value. Date ranges can be applied too. This is a DICOM Standard query key on Study level.
(0020,0010)	Study ID	The default value is empty string. The operator can enter each value that conforms to the Value Representation SH. This is a DICOM Standard query key on Study level.

Copyright: © Carl Zeiss Meditec ,Inc.

(0010,0010)	Patient's Name	The default value is empty string. Only family name and given name can be used as query key. This is a DICOM Standard query key on Study level.
(0010,0020)	Patient ID	The default value is empty string. The operator can enter each value that conforms to the Value Representation LO. This is a DICOM Standard query key on Study level.
(0008,0090)	Referring Physician's Name	The default value is empty string. Only family name and given name can be used as query key. The effect of this query key on the query depends on Service Provider implementation since this query key is an optional query key.
(0008,0061)	Modalities in Study	Default value is 'OPT'. The operator can select a value from a drop-down-box. The effect of this query key on the query depends on Service Provider implementation since this query key is an optional query key.

4.2.1.3.4 Activity – Native import

Operator can trigger "Native import" at any time if no other activity is in progress.

This activity has no direct effect on DICOM messaging.

During this activity, the Application Software imports scan data and analysis data that has been created in Application Software instances other than this instance. The imported data is subject to be archived within next "Archive data"-activity call.

4.2.1.3.5 Activity – Perform scan(s)

Operator can trigger "Perform scan(s)" at any time if no other activity is in progress.

During this activity, the Application Software creates scan data. It also creates default parameters for an analysis. Scan data and Analysis parameters will be stored as Raw Data SOP Instances. The created data is subject to be archived within next "Archive data"-activity call.

Alternatively, based on the choices driven by the user for auto archive, the scanned data and analysis data in RAW IOD will be sent to the configured storage provider, followed by a storage commitment request to the storage commitment provider. This happens only when the user has the auto archive option checked along with "Archive Current Exam after Saving" option checked. This allows the user to initiate auto-archive immediate after performing a scan.

Copyright: © Carl Zeiss Meditec ,Inc.

4.2.1.3.5.1 Description and Sequencing of Activities

Figure 4-9 – Perform Scan

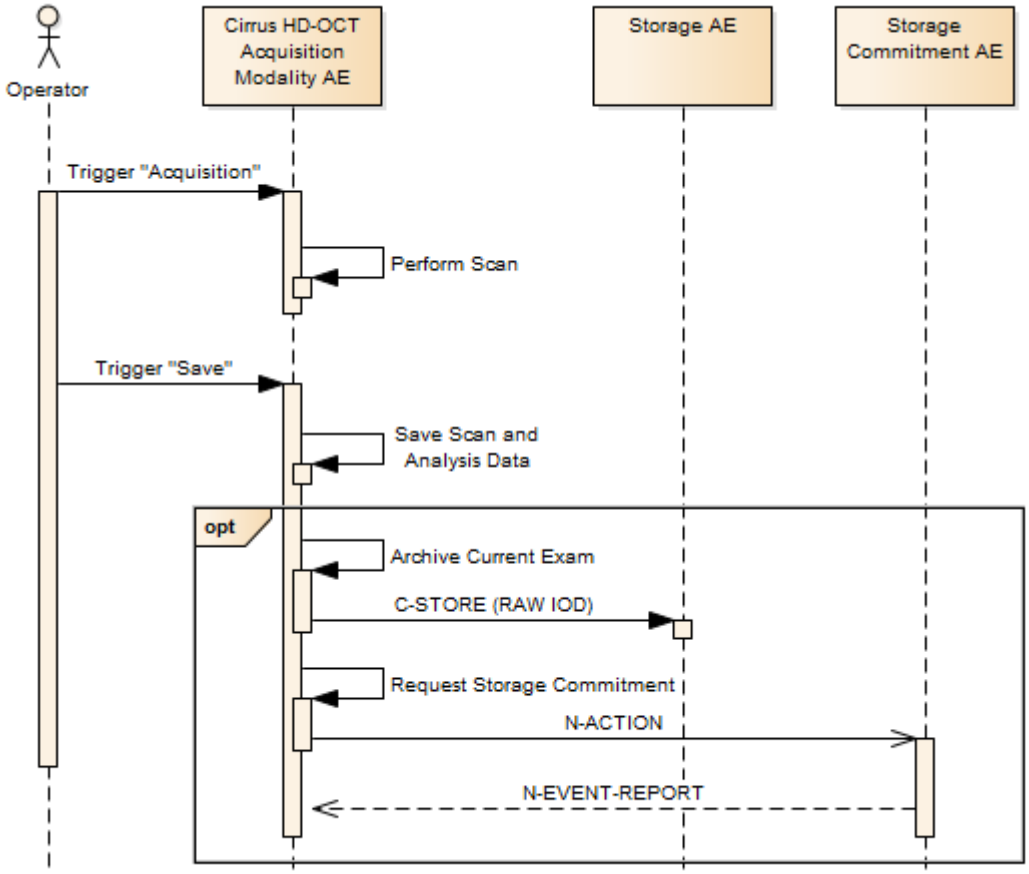

Trigger "Acquisition"

Operator triggers the activity by clicking the "Acquisition" button

Trigger Save

Operator clicks the "Save" button after the scan. Application Software creates scan data and default parameters for an analysis. Scan data and Analysis parameters will be stored as Raw Data SOP Instances.

Archive Current Exam

When the "Auto Archive" and "Archive Current Exam after Saving" options are checked, the auto-archive activity will be initiated and transfer the create RAW IOD to the configured storage provider.

Copyright: © Carl Zeiss Meditec ,Inc.

4.2.1.3.5.2 Proposed Presentation Contexts

Following presentation contexts are offered for each initiated association. During this activity the Application Software uses only

- Raw Data Storage with Transfer Syntax ELE or ILE
- Storage Commitment Push Model with Transfer Syntax ILE

Table 4-20 Proposed Presentation Contexts for Activity Perform scan(s)

Presentation Context Table					
Abstract Syntax		**Transfer Syntax**		**Role**	**Ext. Neg.**
Name	**UID 1.2.840.10008. ...**	**Name List**	**UID List 1.2.840.10008. ...**		
Verification	1.1	ILE	1.2	SCU	No
Modality Worklist IM - FIND	5.1.4.31	ILE	1.2	SCU	No
Study Root Q/R IM - FIND	5.1.4.1.2.2.1	ILE	1.2	SCU	Yes
Study Root Q/R IM - MOVE	5.1.4.1.2.2.2	ILE	1.2	SCU	No
Patient Root Q/R IM – FIND	5.1.4.1.2.1.1	ILE	1.2	SCU	Yes
Modality Performed Procedure Step	3.1.2.3.3	ILE	1.2	SCU	No
Modality Performed Procedure Step Notification	3.1.2.3.5	ILE	1.2	SCU	No
Encapsulated PDF Storage	5.1.4.1.1.104.1	ILE	1.2	SCU	No
		ELE	1.2.1	SCU	No
Raw Data Storage	5.1.4.1.1.66	ILE	1.2	SCU	No
		ELE	1.2.1	SCU	No
OP 8 Bit Image Storage	5.1.4.1.1.77.1.5.1	JPG-1	1.2.4.50	SCU	No
		MPEG 2	1.2.4.100	SCU	No
		J2K	1.2.4.91	SCU	No
		J2K-LL	1.2.4.90	SCU	No
OPT Image Storage	5.1.4.1.1.77.1.5.4	J2K	1.2.4.91	SCU	No
		J2K-LL	1.2.4.90	SCU	No
Multi-frame True Color Secondary Capture Image Storage	5.1.4.1.1.7.4	RLE	1.2.5	SCU	No
		JPG-1	1.2.4.50	SCU	No
Storage Commitment Push Model	1.20.1	ILE	1.2	SCU	No

Note: The networking interface proposes more presentation contexts than actually supported by the application. All lines in grey are not supported by the CIRRUS HD-OCT.

4.2.1.3.5.3 SOP Specific Conformance for Storage SOP Classes

Please see section 4.2.1.3.8.3 for details.

4.2.1.3.5.4 SOP Specific Conformance for Storage Commitment SOP Class

Please see section 4.2.1.3.8.4 for details.

Copyright: © Carl Zeiss Meditec ,Inc.

4.2.1.3.6 Activity – Query Patient

4.2.1.3.6.1 Description and Sequencing of Activities

Figure 4-10 - Query Patient - Basic Search

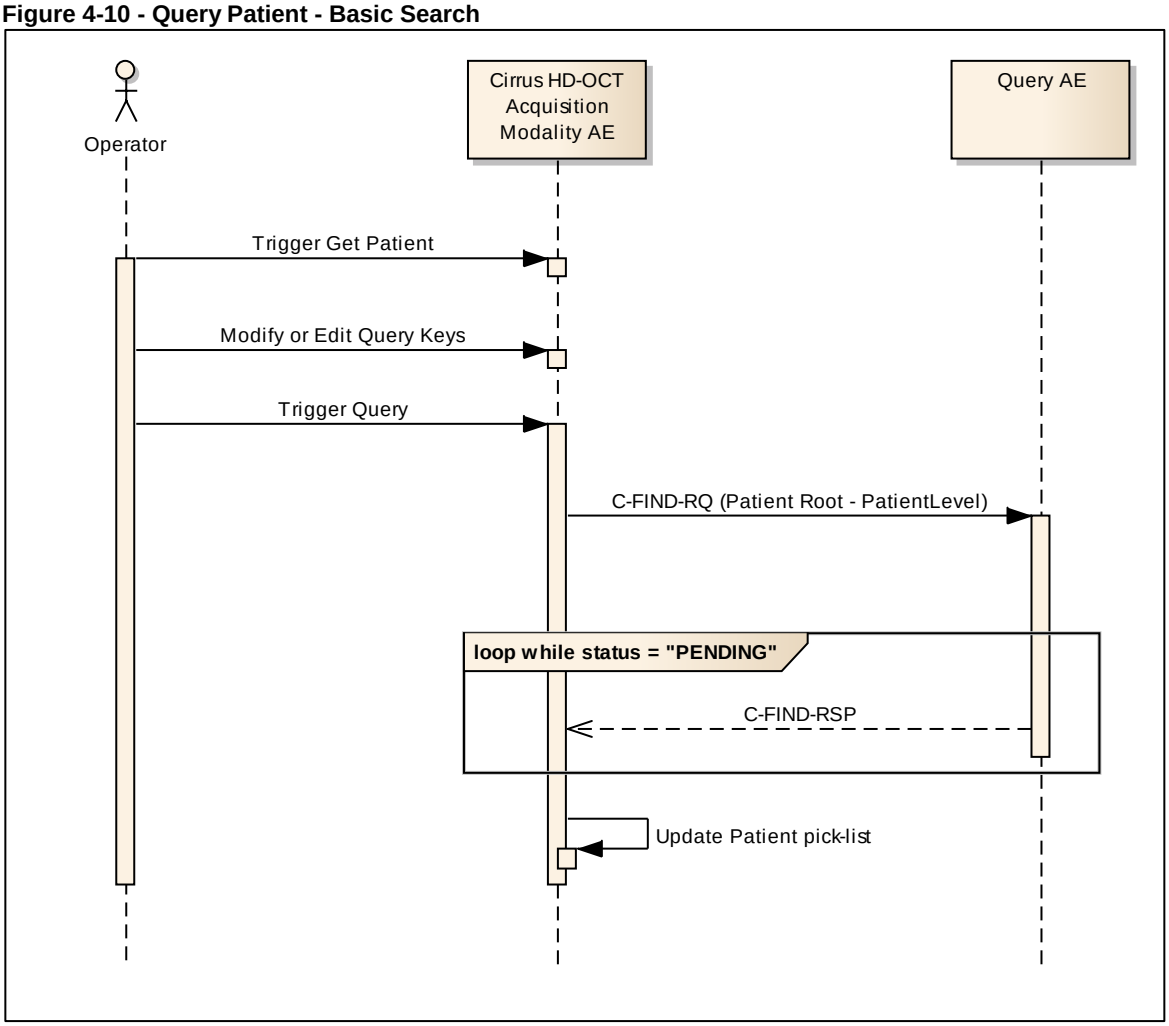

Trigger "Get Patient"

The activity "Get Patient" can be triggered by operator at any time by clicking on the search button.

Edit or modify query keys

In the basic search two query keys are supported: patient's last name and patient id. Those query keys may be left empty. This is not recommended as it results in an unconstraint query and may cause a high load on the connected DICOM Query SCP. Also the resulting list will not contain all findings, but will be limited to a maximum number of query responses. This limit is configurable. See section 4.4.2.1. General Parameters for further details. The query keys allow to take in the wildcards of "*" and "?" for matching names and Ids.

For extended search, in addition to name and Ids, there are extended query keys by exam, exam date range, category, For more details see further below in this section.

Trigger query

After specifying the query keys he or she triggers the query.

The query performed is a Patient Root Query on PATIENT level, with only patient name and/or patient Id specified as query key.

Copyright: © Carl Zeiss Meditec ,Inc.

The number of matches is limited to a configurable number. If the number of matches oversteps that limit, the Application Software sends a C-CANCEL-RQ, then an A-RELEASE-RQ and a dialog shows up, notifying the operator about this limitation.

Select patient in pick-list

During updating the pick-list, studies are collated so that the operator can select a patient rather than studies. The resulting list of patients is shown to the operator. He can then select one single patient. If the operator cannot find the patient he or she is looking for, he or she can immediately repeat the query, using other values as search criteria.

Copyright: © Carl Zeiss Meditec ,Inc.

Figure 4-11 - Query Patient - Advanced Search

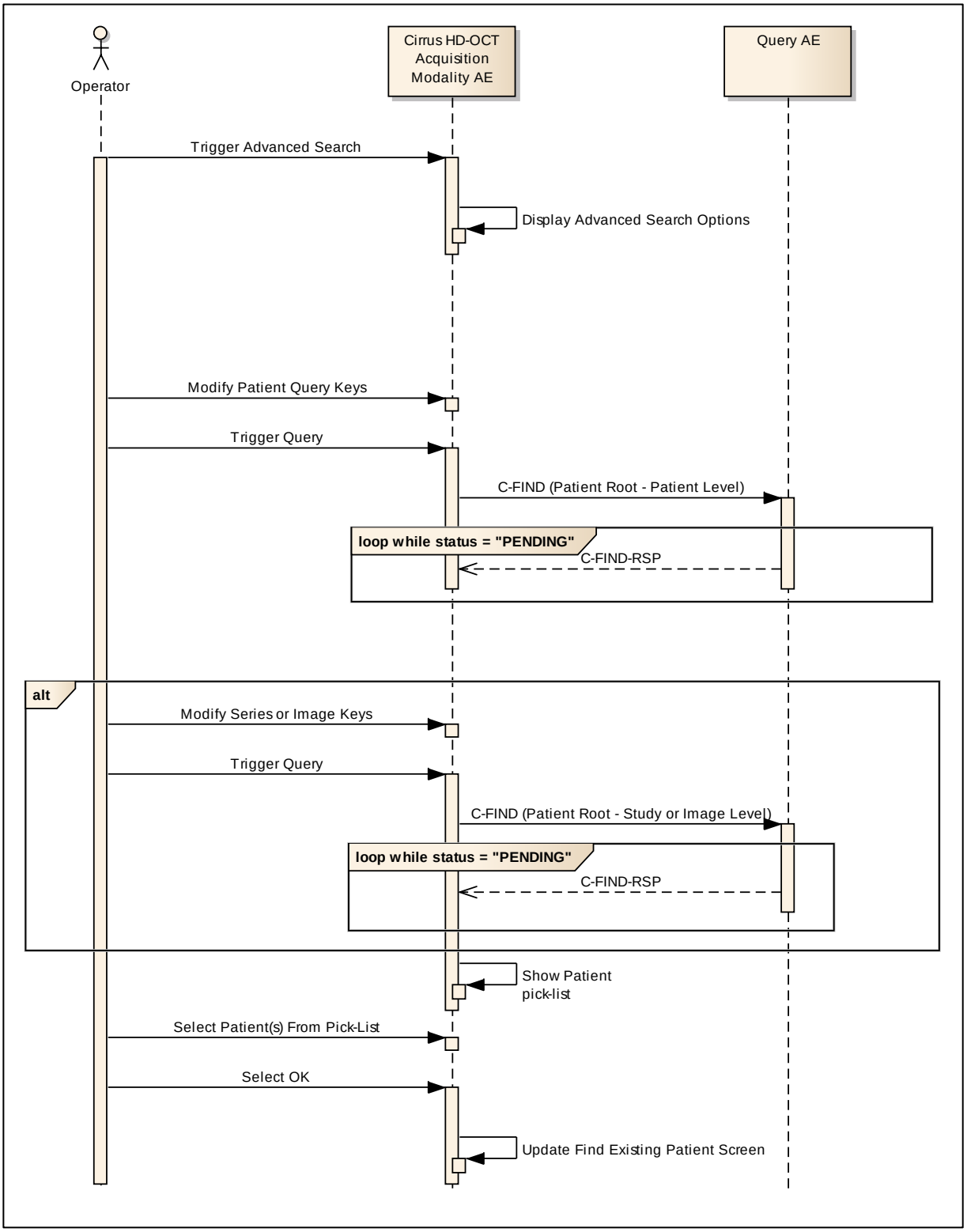

Trigger "Advanced Search"

For advanced search, an optional dialog is presented to the operator for additional query keys.

Copyright: © Carl Zeiss Meditec ,Inc.

Edit or modify query keys

For extended search, in addition to patient's last name and Id, there are extended query keys by patient's first and middle name, by exam, exam date range and scan category,

Wildcards"*" and "?" are supported.

Trigger query

After specifying the query keys he or she triggers the query.

When in extended search, the query level can vary. As soon as series or image level attributes are specified as query keys in the search dialog, the query performed is a relational Patient Root Query on IMAGE level.

As long as only patient level query keys are used, the query performed is a Patient Root Query on PATIENT level. This is always the case for the quick search, where only patient name and/or patient Id can be specified as query key.

The number of matches is limited to a configurable number. If the number of matches oversteps that limit, the Application Software sends a C-CANCEL-RQ, then an A-RELEASE-RQ and a dialog shows up, notifying the operator about this limitation.

Select patient in pick-list

During updating the pick-list, studies are collated so that the operator can select a patient rather than studies. The resulting list of patients is shown to the operator. He can then select one single patient. If the operator cannot find the patient he or she is looking for, he or she can immediately repeat the query, using other values as search criteria. By clicking on "Ok", the operator decides to have the selected patient(s) listed in the CIRRUS HD-OCT "Find Existing Patient" list.

4.2.1.3.6.2 Proposed Presentation Contexts

Following presentation contexts are offered for each initiated association. During this activity the Application Software uses only

- Patient Root Query/Retrieve Information Model - FIND" with Transfer Syntax ILE

Table 4-21 Proposed Presentation Contexts for Activity Query Patient

Presentation Context Table					
Abstract Syntax		**Transfer Syntax**		**Role**	**Ext. Neg.**
Name	**UID 1.2.840.10008. ...**	**Name List**	**UID List 1.2.840.10008. ...**		
Verification	1.1	ILE	1.2	SCU	No
Modality Worklist IM - FIND	5.1.4.31	ILE	1.2	SCU	No
Study Root Q/R IM - FIND	5.1.4.1.2.2.1	ILE	1.2	SCU	Yes See Note 1
Study Root Q/R IM - MOVE	5.1.4.1.2.2.2	ILE	1.2	SCU	No
Patient Root Q/R IM – FIND	5.1.4.1.2.1.1	ILE	1.2	SCU	Yes See Note 1
Modality Performed Procedure Step	3.1.2.3.3	ILE	1.2	SCU	No
Modality Performed Procedure Step Notification	3.1.2.3.5	ILE	1.2	SCU	No
Encapsulated PDF Storage	5.1.4.1.1.104.1	ILE	1.2	SCU	No
		ELE	1.2.1	SCU	No
Raw Data Storage	5.1.4.1.1.66	ILE	1.2	SCU	No

Copyright: © Carl Zeiss Meditec ,Inc.

		ELE	1.2.1	SCU	No
OP 8 Bit Image Storage	5.1.4.1.1.77.1.5.1	JPG-1	1.2.4.50	SCU	No
		MPEG 2	1.2.4.100	SCU	No
		J2K	1.2.4.91	SCU	No
		J2K-LL	1.2.4.90	SCU	No
OPT Image Storage	5.1.4.1.1.77.1.5.4	J2K	1.2.4.91	SCU	No
		J2K-LL	1.2.4.90	SCU	No
Multi-frame True Color Secondary Capture Image Storage	5.1.4.1.1.7.4	RLE	1.2.5	SCU	No
		JPG-1	1.2.4.50	SCU	No
Storage Commitment Push Model	1.20.1	ILE	1.2	SCU	No

Note 1: C-FIND extended negotiation is offered. Relational-query support is required by the SCP.

Note 2: The networking interface proposes more presentation contexts than actually supported by the application. All lines in grey are not supported by the CIRRUS HD-OCT.

4.2.1.3.6.3 SOP Specific Conformance for Patient Root Query/Retrieve SOP Class as SCU

Table 4-22 Query C-FIND Response Status Handling Behavior

Service Status	Further Meaning	Error Code	Behavior
Success	Matching is complete No final Identifier is supplied.	0000	The Application Software finishes receiving query results. It finally updates the pick list.
Pending	Matches are continuing	FF00, FF01	The Application Software checks whether the number of received responses overstepped the configurable limit. If the number of received responses overstepped the limit, then the Application Software sends a C-CANCEL-RQ, then an A-RELEASE-RQ to the service provider and a message is displayed.
Refused	Out of Resources	A700	An error message is shown to the operator. The Application Software logs this event and gives up. The pick-list is then empty.
Failure	Identifier does not match SOP Class	A900	
Failure	Unable to process	C000 - CFFF	
Cancel	Matching terminated due to Cancel request	FE00	
*	*	Any other status code	

Copyright: © Carl Zeiss Meditec ,Inc.

Table 4-23 PATIENT level keys for the Patient Root Query/Retrieve Information Model (request and response)

Tag	Tag Name	Query Key	Imported	Return Key
(0010,0010)	Patient's Name	X	X	X
(0010,0020)	Patient ID	X	X	X
(0010,0021)	Issuer of Patient ID	X	X	X
(0010,0030)	Patient's Birth Date	X, RNG	X	X
(0010,0040)	Patient's Sex	X	X	X
(0010,1000)	Other Patient IDs			X
(0010,2160)	Ethnic Group		X	X
(0010,4000)	Patient Comments			X

Table 4-24 STUDY level keys for the Patient Root Query/Retrieve Information Model (request and response)

Tag	Tag Name	Query Key	Imported	Return Key
(0008,0020)	Study Date	X, RNG		X
(0008,0030)	Study Time			X
(0008,0050)	Accession Number	X	X	X
(0020,0010)	Study ID			X
(0020,000D)	Study Instance UID			X
(0008,1030)	Study Description			X
(0008,0061)	Modalities in Study			X
(0008,0090)	Referring Physician's Name			X
(0008,1080)	Admitting Diagnoses Description			X

Table 4-25 SERIES level keys for the Patient Root Query/Retrieve Information Model (request and response)

Tag	Tag Name	Query Key	Imported	Return Key
(0008,0060)	Modality			X
(0020,0011)	Series Number			X
(0020,000E)	Series Instance UID			X

Copyright: © Carl Zeiss Meditec ,Inc.

(0008,103E)	Series Description			X
(0040,0275)	Request Attributes Sequence			X
(0040,0244)	Performed Procedure Step Start Date			X
(0040,0245)	Performed Procedure Step Start Time			X
(0008,0021)	Series Date			X
(0008,0031)	Series Time			X
(0020,0060)	Laterality			X
(0008,1050)	Performing Physician's Name			X
(0008,1090)	Manufacturer's Model Name			X

Table 4-26 Keys for the Patient Root Query/Retrieve Information Model (request and response) on INSTANCE level:

Tag	Tag Name	Query Key	Imported	Return Key
(0020,0013)	Instance Number			X
(0008,0018)	SOP Instance UID			X
(0042,0010)	Document Title			X
(0008,0016)	SOP Class UID			X
(0008,0012)	Instance Creation Date			X
(0008,0013)	Instance Creation Time			X
(0008,002A)	Acquisition Datetime			X
(0020,0062)	Image Laterality			X
(0008,0008)	Image Type			X
(0008,114A)	Referenced Instance Sequence			X
(0405,XX01)	Pattern Type	X, SEL		X
(0405,XX1A)	Signal Strength			X
(0407,XXA1)	OCT Cube Sequence			X

Values for column “Query key”:

X

The attribute is used as query key. The operator can assign values to that attribute. When the operator triggers the query, the values of the query keys are transferred to the Query Service Provider. How the Query Service Provider interprets the given value is out of scope of this document.

RNG

The operator can apply a range as value for the query key.

SEL

The operator can select a value from a given list of values.

Values for column “Displayed in pick-list”:

X

After receiving query results, the value of this attribute is shown in the pick-list.

Copyright: © Carl Zeiss Meditec ,Inc.

Values for column "Return Key":
X

This attribute is used as a return key.

Table 4-27 Query key details

Tag	Tag Name	Description
(0010,0010)	Patient's Name	The default value is empty string. Only family name, given name and middle name can be used as query key. This is a DICOM Standard query key on Patient level.
(0010,0020)	Patient ID	The default value is empty string. The operator can enter each value that conforms to the Value Representation LO. This is a DICOM Standard query key on Patient level.
(0010,0030)	Patient's Birth Date	The default value is empty string. An exact date or date range can be specified. The effect of this query key on the query depends on Service Provider implementation since this query key is an optional query key.
(0010,0021)	Issuer of Patient ID	The default value is empty string. The operator can enter each value that conforms to the Value Representation LO. The effect of this query key on the query depends on Service Provider implementation since this query key is an optional query key.
(0008,0020)	Study Date	The default is "all dates" and therefore an empty string. An exact date or date range can be specified
(0008,0050)	Accession Number	The default value is empty string. The operator can enter each value that conforms to the Value Representation SH.
(0405,xx01)	Pattern Type	The default value is empty string. The operator can select from a drop down list. The effect of this query key on the query depends on the Service Provider implementation since this query key is a private attribute.

4.2.1.3.7 Activity – Perform analysis

Operator can trigger "Perform analysis" at any time if no other activity is in progress.

Copyright: © Carl Zeiss Meditec ,Inc.

4.2.1.3.7.1 Description and Sequencing of Activities (Analysis)

Figure 4-12 - Perform Analysis

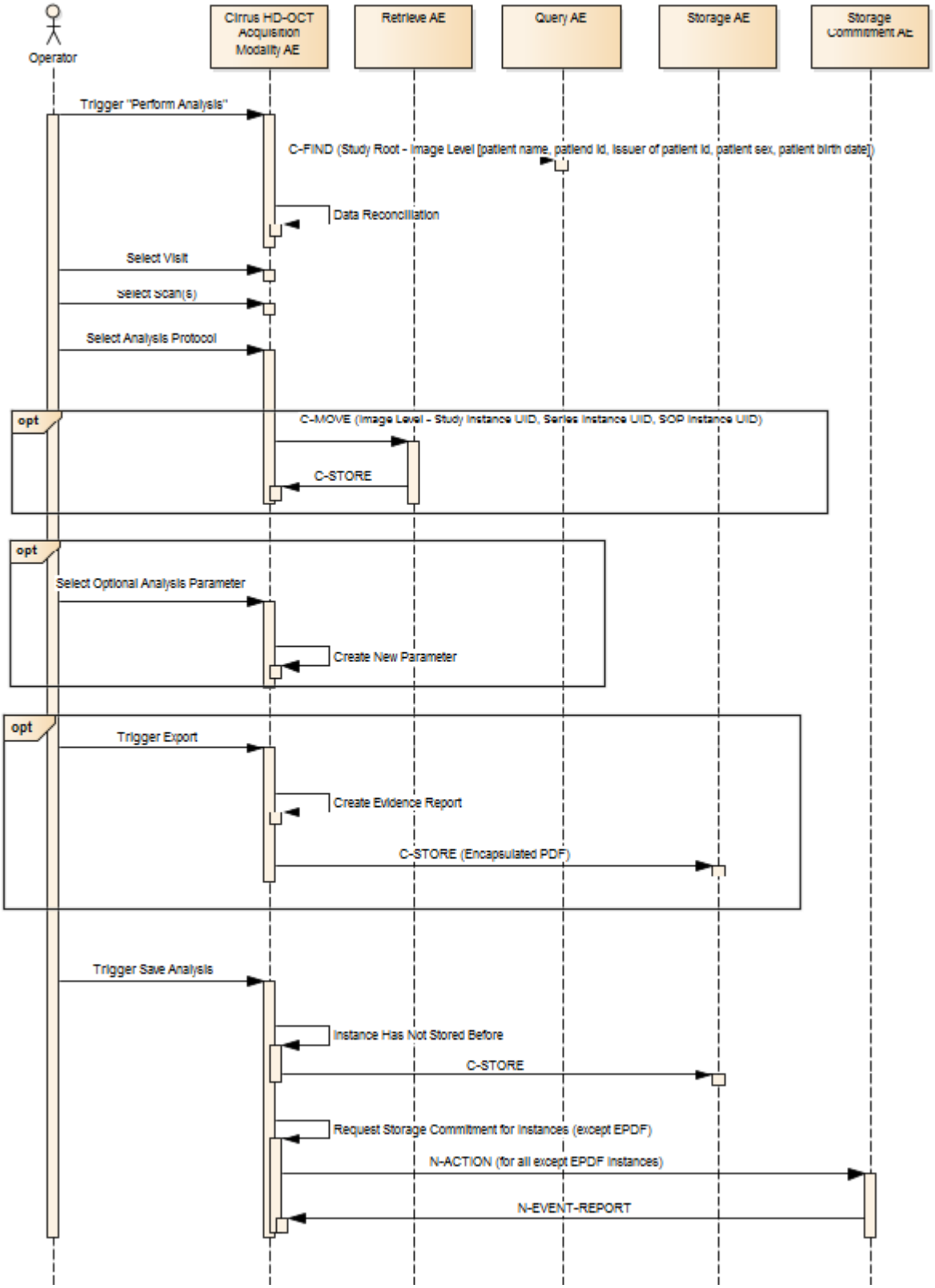

Trigger "Perform Analysis"

The activity can be triggered by selecting a patient from the pick list and clicking the analyse button. This activity triggers a relational Study Root Query on IMAGE level by

Copyright: © Carl Zeiss Meditec ,Inc.

sending patient name, patient id, issuer of patient id, patient sex and patient birth date as query keys.

Data reconciliation is achieved in the following manner:

Go through scan list of this particular patient in Database.

Check if particular scan is committed and exists on Storage AE.

Delete locally if it doesn't exist on Storage AE.

Thus synchronization can be maintained between archived Storage AE data and local data.

Select a Visit

Operator can select a visit to perform an analysis.

Select Scan(s)

The operator selects one or more scans to include in the report. The Application Software enables applicable analysis types.

Select Analysis Protocol

The operator selects one analysis type.

Optionally the application software retrieves scan and analysis data to perform an analysis based on multiple prior scans

The scan and analysis data is retrieved to the CIRRUS HD-OCT via C-MOVE request.

Select Optional Analysis Parameter

This is an optional step. The operator can adjust the parameters and thus, modify the analysis. Adjusting the parameters causes the creation of a new set of parameters. That set of parameters will be stored as a new instance of Raw Data IOD after save analysis.

Trigger export

At any time the operator can create an evidence report. The Application Software sends evidence reports to the configured Storage Application Entity.

Evidence reports won't be stored or archived on the instrument itself.

The created evidence report contains the information that was presented on screen when the operator triggered the export. The page orientation of the created report is portrait. Usually the evidence report contains one to three pages.

Trigger save analysis

At any time the operator can save the analysis. The application software sends the Raw Data IOD to the configured Storage Application Entity automatically only when "Enable Auto-Archive" is enabled through application preference. If this option is turned off, analysis data is archived only during manual archive.

If "Send OP and OPT IODs During Archive" is enabled through application preference, the application software sends also the OPT Image and OP 8 Bit Image associated with each Raw Data IOD to the configured storage application entity. If this option is disabled, only the Raw Data IOD is archived.

With "Export To DICOM" menu item, analysis results can also be saved and archived Storage AE as EPDF.

In an acquisition modality, the application software will sent out the Storage Commitment requests all IODs except EPDF after the storage.

In a review station, no Storage Commitment will be requested.

Copyright: © Carl Zeiss Meditec ,Inc.

4.2.1.3.7.2 Proposed Presentation Contexts

Following presentation contexts are offered for each initiated association. During this activity the Application Software uses only

- Encapsulated PDF with Transfer Syntax ELE or ILE
- Raw Data Storage with Transfer Syntax ELE or ILE
- OP 8Bit Image Storage with Transfer Syntax J2K
- OPT Image Storage with Transfer Syntax J2K
- Storage Commitment Push Model with Transfer Syntax ILE (only for acquisition modality)

Table 4-28 Proposed Presentation Contexts for Activity Perform analysis

Presentation Context Table					
Abstract Syntax		**Transfer Syntax**		**Role**	**Ext. Neg.**
Name	**UID 1.2.840.10008. ...**	**Name List**	**UID List 1.2.840.10008. ...**		
Verification	1.1	ILE	1.2	SCU	No
Modality Worklist IM - FIND	5.1.4.31	ILE	1.2	SCU	No
Study Root Q/R IM - FIND	5.1.4.1.2.2.1	ILE	1.2	SCU	Yes [1)]
Study Root Q/R IM - MOVE	5.1.4.1.2.2.2	ILE	1.2	SCU	No
Patient Root Q/R IM – FIND	5.1.4.1.2.1.1	ILE	1.2	SCU	Yes [1)]
Modality Performed Procedure Step	3.1.2.3.3	ILE	1.2	SCU	No
Modality Performed Procedure Step Notification	3.1.2.3.5	ILE	1.2	SCU	No
Encapsulated PDF Storage	5.1.4.1.1.104.1	ILE	1.2	SCU	No
		ELE	1.2.1	SCU	No
Raw Data Storage	5.1.4.1.1.66	ILE	1.2	SCU	No
		ELE	1.2.1	SCU	No
OP 8 Bit Image Storage	5.1.4.1.1.77.1.5.1	JPG-1	1.2.4.50	SCU	No
		MPEG2	1.2.4.100	SCU	No
		J2K	1.2.4.91	SCU	No
		J2K-LL	1.2.4.90	SCU	No
OPT Image Storage	5.1.4.1.1.77.1.5.4	J2K	1.2.4.91	SCU	No
		J2K-LL	1.2.4.90	SCU	No
Multi-frame True Color Secondary Capture Image Storage	5.1.4.1.1.7.4	RLE	1.2.5	SCU	No
		JPG-1	1.2.4.50	SCU	No
Storage Commitment Push Model	1.20.1	ILE	1.2	SCU	No

Note 1: C-FIND extended negotiation is offered. Relational-query support is required by the SCP.

Note 2: The networking interface proposes more presentation contexts than actually supported by the application. All lines in grey are not supported by the CIRRUS HD-OCT.

4.2.1.3.7.3 SOP Specific Conformance for Encapsulated PDF Storage SOP Class as SCU

Service Status	Further Meaning	Status Code	Behavior
Success	Success	0000	The Application Software returns from this activity, prompting a success message.
Refused	Out of Resources	A700 – A7FF	An error message is shown to the operator. The

Copyright: © Carl Zeiss Meditec ,Inc.

Error	Data Set does not match SOP Class	A900 – A9FF	Application Software logs this event and returns.
Error	Cannot Understand	C000 – CFFF	
Warning	Coercion of Data Elements	B000	
Warning	Data Set does not match SOP Class	B007	
Warning	Elements Discarded	B006	
*	*	Any other status value	

4.2.1.3.8 Activity – Archive data

Operator can trigger the activity “Archive data” at any time if no other activity is in progress. Archiving data can also happen in the background automatically (automatic archiving is described in the respective sections describing perform scan or analysis and is not part of the description of manual archiving).

Based on the users preferences, the local data is deleted either after a successful archive for current patient after finishing analysis or after a successful archive of all patients during shutdown. If none of those options is selected, the data remains on the CIRRUS HD-OCT and the database is flagged to show that the data has been archived.

Storage operations are done on all not archived instances. Depending on the Acquisition different IODs are generated (see Table 4-1 Send OP and OPT IODs During Archive for the following acquisitions). For every acquisition a Raw Data Acquisition and Raw Data Analysis IOD is created. For Macular Cube 512x128, Macular Cube 200x200, 5 Line Raster and HD 5 Line Raster OP and OPT IODs are additionally generated. Storage Commitment happens on all except EPDF IODs.

Copyright: © Carl Zeiss Meditec ,Inc.

4.2.1.3.8.1 Description and Sequencing of Activities

Figure 4-13 - Archive data

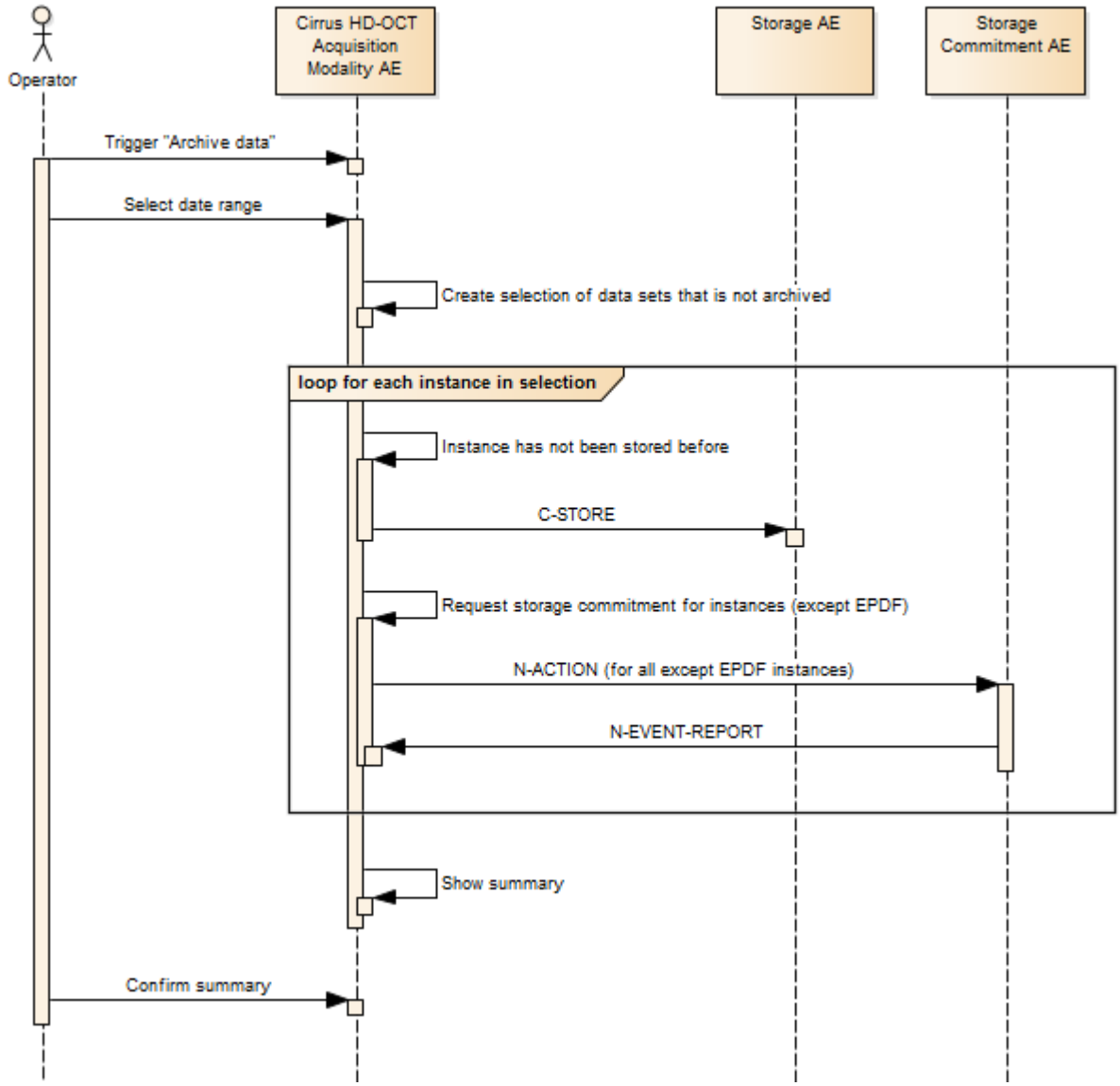

Trigger "Archive data"

Operator can trigger the activity "Archive data" at any time if no other activity is in progress.

Select date range

The operator can specify a date range on study date. Studies within the range become subject to be archived. If the operator does not specify a date range, then all studies become subject to be archived.

After the operator decided about the date range, the Application Software creates a selection of data that has not been archived. The state "not archived" addresses data that has been stored locally and has not been transferred to the configured storage provider. It also addresses data that has been transferred to the configured storage provider before and the storage commitment has not been negotiated successfully.

The operator can cancel this activity, which finishes after the currently active storage communication is finished.

In an acquisition modality, to verify that the data has been archived, the application software asks the configured Storage Commitment Provider to commit storage.

Copyright: © Carl Zeiss Meditec ,Inc.

Data that has been successfully archived and committed is subject to be deleted. The Application Software checks frequently for free disk space. When free disk space runs under a certain threshold, the Application Software checks for data that has been archived and not been accessed for 30 days. The operator can also manually trigger the cleaning process.

When Application Software preferences are set to "Purge Archived Data for Current Patient After Analysis" or "Purge Archived Data for all Patients at Shutdown", Data will be purged from local data storage only when it is flagged “Archived and Committed Data”.

Table 4-29 Purge Options

Purge Options	Archived Status	Behavior
Purge Archived Data for current Patient After Analysis	Committed	Purged
	Stored, but yet not committed or Not Archived	Not Purged
Purge Archived Data for All Patients at Shutdown	Committed	Purged
	Stored, but yet not committed or Not Archived	Not Purged

Confirm summary

The summary lists the number of successfully transferred instances and the number of instances that failed archival.

4.2.1.3.8.2 Proposed Presentation Contexts

Following presentation contexts are offered for each initiated association. During this activity the Application Software uses only

- Raw Data Storage with Transfer Syntax ELE or ILE
- Ophthalmic Photography 8Bit Image Storage with Transfer Syntax J2K
- Ophthalmic Tomography Image Storage with Transfer Syntax J2K
- Storage Commitment Push Model with Transfer Syntax ILE (only for acquisition modality)

Table 4-30 Proposed Presentation Contexts for Activity Archive data

Presentation Context Table					
Abstract Syntax		Transfer Syntax		Role	Ext. Neg.
Name	UID 1.2.840.10008. ...	Name List	UID List 1.2.840.10008. ...		
Verification	1.1	ILE	1.2	SCU	No
Modality Worklist IM - FIND	5.1.4.31	ILE	1.2	SCU	No
Study Root Q/R IM - FIND	5.1.4.1.2.2.1	ILE	1.2	SCU	Yes
Study Root Q/R IM - MOVE	5.1.4.1.2.2.2	ILE	1.2	SCU	No
Patient Root Q/R IM – FIND	5.1.4.1.2.1.1	ILE	1.2	SCU	Yes
Modality Performed Procedure Step	3.1.2.3.3	ILE	1.2	SCU	No
Modality Performed Procedure Step Notification	3.1.2.3.5	ILE	1.2	SCU	No
Encapsulated PDF Storage	5.1.4.1.1.104.1	ILE	1.2	SCU	No
		ELE	1.2.1	SCU	No
Raw Data Storage	5.1.4.1.1.66	ILE	1.2	SCU	No

Copyright: © Carl Zeiss Meditec ,Inc.

		ELE	1.2.1	SCU	No
OP 8 Bit Image Storage	5.1.4.1.1.77.1.5.1	JPG-1	1.2.4.50	SCU	No
		MPEG2	1.2.4.100	SCU	No
		J2K	1.2.4.91	SCU	No
		J2K-LL	1.2.4.90	SCU	No
OPT Image Storage	5.1.4.1.1.77.1.5.4	J2K	1.2.4.91	SCU	No
		J2K-LL	1.2.4.90	SCU	No
Multi-frame True Color Secondary Capture Image Storage	5.1.4.1.1.7.4	RLE	1.2.5	SCU	No
		JPG-1	1.2.4.50	SCU	No
Storage Commitment Push Model	1.20.1	ILE	1.2	SCU	No

Note 2: The networking interface proposes more presentation contexts than actually supported by the application. All lines in grey are not supported by the CIRRUS HD-OCT.

4.2.1.3.8.3 SOP Specific Conformance for Storage SOP Classes

Table 4-31 Storage C-STORE Response Status Handling Behavior

Service Status	Further Meaning	Status Code	Behavior
Success	Success	0000	The Application Software continues storing next instance if there is at least one instance left in the set of instances.
Refused	Out of Resources	A700 – A7FF	An error message is shown to the operator. The Application Software logs this event and gives up.
Error	Data Set does not match SOP Class	A900 – A9FF	An error message is shown to the operator. The Application Software logs this event and continues storing next instance if there is at least one instance left in the set of instances.
Error	Cannot Understand	C000 – CFFF	
Warning	Coercion of Data Elements	B000	
Warning	Data Set does not match SOP Class	B007	
Warning	Elements Discarded	B006	
*	*	Any other status value	

4.2.1.3.8.4 SOP Specific Conformance for Storage Commitment SOP Class

4.2.1.3.8.4.1 Storage Commitment Operations (N-ACTION)

In an acquisition modality, the application software will request storage commitment for instances of all SOP Class (scan and analysis data) except EPDF if the Remote AE is configured as Storage Commitment Provider and a presentation context for the Storage Commitment Push Model has been accepted.

No Storage Commitment will be requested in a review station.

The Storage Commitment Request addresses always only one SOP Instance.

Copyright: © Carl Zeiss Meditec ,Inc.

The behavior of the Application Software when encountering status codes in a N-ACTION response is summarized in the table below:

Table 4-32 Storage Commitment N-ACTION Response Status Handling Behavior

Service Status	Further Meaning	Status Code	Behavior
Failure	No such attribute	0105	The CIRRUS HD-OCT reports "DICOM archive failed " with "pending" status and shows the user a notification message. The archive status flag is set to "Archived" (but not committed) and the objects that failed will be included in a future commitment call .
Failure	Invalid attribute value	0106	
Failure	Processing failure	0110	
Failure	Duplicate SOP instance	0111	
Failure	No such object instance	0112	
Failure	No such event type	0113	
Failure	No such argument	0114	
Failure	Invalid argument value	0115	
Failure	Invalid object instance	0117	
Failure	No such SOP class	0118	
Failure	Class-instance conflict	0119	
Failure	Missing attribute	0120	
Failure	Missing attribute value	0121	
Refused	SOP class not supported	0122	
Failure	No such action type	0123	
Failure	Duplicate invocation	0210	
Failure	Unrecognized operation	0211	
Failure	Mistyped argument	0212	
Failure	Resource limitation	0213	
*	*	Any other status value	
Success	Success	0000	The Application Software will wait for an incoming N-EVENT-REPORT

Copyright: © Carl Zeiss Meditec ,Inc.

4.2.1.4 Association Acceptance Policy

4.2.1.4.1 Activity – Verify Communication

The activity can be performed at any time. The service is available as soon as the Application Software has been started.

4.2.1.4.1.1 Description and Sequencing of Activities

The Software AE responds to verification requests made by remote AEs.

4.2.1.4.1.2 Accepted Presentation Contexts

Table 4-33 Acceptable Presentation Context for Activity Verify Communication

Presentation Context Table					
Abstract Syntax		Transfer Syntax		Role	Ext. Neg.
Name	UID 1.2.840.10008. ...	Name List	UID List 1.2.840.10008. ...		
Verification	… 1.1	ILE	… 1.2	SCP	No

4.2.1.4.1.3 SOP Specific Conformance for Verification SOP Class as SCP

The Application Software AE provides standard conformance.

4.2.1.4.2 Activity - Get scan data and analysis data

This chapter describes the aspect of association acceptance of the activity “Get scan data and analysis data”. The activity retrieves scan data and analysis data belonging to a selected patient.

4.2.1.4.2.1 Description and Sequencing of Activities

The description and sequencing of activities covered by chapter 4.2.1.3.3 Activity - Get scan data and analysis data.

4.2.1.4.2.2 Accepted Presentation Contexts

Table 4-34 Acceptable Presentation Contexts for Activity Get scan data and analysis data

Presentation Context Table					
Abstract Syntax		Transfer Syntax		Role	Ext. Neg.
Name	UID 1.2.840.10008. ...	Name List	UID List 1.2.840.10008. ...		
Verification	1.1	ILE	1.2	SCP	No
Raw Data Storage	5.1.4.1.1.66	ILE	1.2	SCP	No
		ELE	1.2.1	SCP	No

4.2.1.4.2.3 SOP Specific Conformance for Storage SOP Class as SCP

The Application Software AE provides standard conformance.

4.2.1.4.3 Activity – Archive data

This chapter describes the aspect of association acceptance of the activity “Archive data”. The activity stores scan data and analysis data created at the modality and requests a storage commitment afterwards if it is running in an acquisition modality.

4.2.1.4.3.1 Description and Sequencing of Activities

The description and sequencing of activities is covered by chapter 4.2.1.3.8 Activity – Archive data.

Copyright: © Carl Zeiss Meditec ,Inc.

4.2.1.4.3.2 Accepted Presentation Contexts

Table 4-35 Acceptable Presentation Contexts for Activity Archive data

Presentation Context Table					
Abstract Syntax		**Transfer Syntax**		**Role**	**Ext. Neg.**
Name	**UID 1.2.840.10008. ...**	**Name List**	**UID List 1.2.840.10008. ...**		
Verification	1.1	ILE	1.2	BOTH	No
Storage Commitment Push Model	1.20.1	ILE	1.2	SCU	No

4.2.1.4.3.3 SOP Specific Conformance for Storage Commitment SOP Class as SCU

4.2.1.4.3.3.1 Storage Commitment Notifications (N-EVENT-REPORT)

The Application Software is capable of receiving an N-EVENT-REPORT notification if it has successfully negotiated a Presentation Context for the Storage Commitment Push Model SOP Class.

The behavior of Application Software when receiving failure reasons within the N-EVENT-REPORT is summarized in the table below.

If the Application Software runs in a timeout or if the association is aborted by the provider or network layer, or if waiting duration for Storage Commitment N-EVENT-REPORT oversteps a configurable time limit then the related SOP Instance is considered as not being committed. Then the SOP Instance is subject of a future Storage Commitment service call. It will be included again within next call of this activity.

In addition to that, the Application Software writes the SOP Instance UID to the log file, together with the failure reason.

Table 4-36 Storage Commitment N-EVENT-REPORT Request Failure Reasons

Meaning	Failure Reason	Behavior
Processing failure	0110	The SOP Instance is considered as not being archived. The SOP Instance is subject of a future archiving service call. It will be re-archived and re-storage committed.
No such object instance	0112	
Resource limitation	0213	The SOP Instance is considered as not being committed. The SOP Instance is subject of a future Storage Commitment service call. It will be re-committed.
Referenced SOP Class not supported	0122	
Class / Instance conflict	0119	
Duplicate transaction UID	0131	

4.3 Network Interfaces

4.3.1 Physical Network Interface

The physical network interface is not visible for the instrument application. The instrument application uses the communication stack as offered by the Operating System.

4.3.2 Additional Protocols

Both IP addresses and host names are supported and get resolved.
Else no additional protocols are supported.

Copyright: © Carl Zeiss Meditec ,Inc.

4.3.3 IPv4 and IPv6 Support

Application software supports IPv6 features through configuration preference settings. This will also require that the instrument or review station installed specific IPv6 protocol and its required attributes via networking configuration for each network interface card.

4.4 Configuration

Local application entity and remote application entity information can be configured with the DICOM Gateway Configuration Tool. There is only one single Application Entity Title used for the instrument Software Application. It is also possible to configure timeout, institution, and query response item limit parameters via the DICOM Gateway Configuration Tool and configuration file.

4.4.1 AE Title/Presentation Address Mapping

The mapping from AE Title to TCP/IP addresses and ports is configurable and set at the time of installation by Installation Personnel.

4.4.1.1 Local AE Titles

The IP is not configurable by the Configuration Tool. The IP is administrated by the Operating System. If the Application Software is running on a host with more than one network connection, the user should select the loopback adapter from the list of ip-addresses. The Application Entity Title as well as the port number is configurable. The default port number is 11112.

4.4.1.2 Remote AE Titles

The mapping of external AE Titles to TCP/IP addresses and ports is configurable. The CIRRUS HD-OCT Application Software allows setting up a remote Application Entity for each service (Modality Worklist, Storage, Storage Commitment, Query and Retrieve). For all Application Entities, the host name or IP, the Port and the Application Entity Title must be known.

4.4.2 Parameters

4.4.2.1 General Parameters

The general parameters are shared for associations to any of the configured AE.

Table 4-37 Configuration Parameters Table

Parameter	Configurable (Yes/No)	Default Value
General Parameters		
DIMSE RSP Timeout	Yes (10 – 60 sec.)	20 sec
Network Timeout	Yes (5-20 sec.)	20 sec.
Max. Association Idle Time	Yes (10 – 60 sec.)	30 sec
(0008,0080) Institution Name	Yes	empty
(0008,1040) Institutional Department Name	No	
(0008,0081) Institution Address	No	
(0008,1010) Station Name	Yes	empty
(0008,1070) Operator’s Name	Yes	Logged in user
Today Patients As Default (Query for Today's Patients at Startup)	Yes	No
Save Image Default Format	No	Jpeg2000

Copyright: © Carl Zeiss Meditec ,Inc.

Enable IP_V6	Yes	IP_V4
AE Specific Parameters		
Maximum number of simultaneous associations is 2.		
Verification SCU Parameters		
C-ECHO Interval	No	Only on demand
Modality Worklist SCU Parameters		
Maximum Query Responses (Modality Worklist IM, Patient Root Q/R IM and Study Root Q/R IM)	Yes (10-999)	100
Today's Patient List Refresh Rate (Modality Worklist Polling Interval)	No	Only on demand
Scheduled Station AE Title	Yes	empty
Patient Root Q/R and Study Root Q/R SCU Parameters		
Maximum Query Responses (Modality Worklist IM, Patient Root Q/R IM and Study Root Q/R IM)	Yes (10-999)	100
Unconstraint query	Yes	If search parameters are left empty in Find existing patient screen
Extended Negotiation – relational query support negotiation (Patient Root Q/R IM and Study Root Q/R IM)	Yes	True
Disable Extended Negotiation For VISTA VA set to false, some of the queries itself remain still relational, but the association negotiation doesn't request relations query support anymore)	Yes	False
Real Time Query- Retrieve (Auto-query of Today' Patients and general Find Existing Patient screen)	Yes	Enabled
Storage Commitment SCU Parameters (Acquisition Modality)		
Storage Commitment enable/disable	No	Always enabled
Storage Commitment SCU Parameters (Review Station)		
Storage Commitment enable/disable	No	Always disabled
Storage SCU Parameters		
Real Time Archive	Yes	Archive Current Exam after Saving
Enable Auto Archive	Yes (5-20 sec.)	Options: Archive Current Exam after Saving Archive today's exam after finishing Analysis
Auto Analysis Archive	Yes	Archive Today's Exam after finishing analysis
Purge Patient Data On Shutdown	Yes	Yes
Purge Patient Data On Finished Analysis	Yes	Yes
Enable OP_OPT (includes OP and OPT IOD when archiving	Yes	False

Copyright: © Carl Zeiss Meditec ,Inc.

data to Storage SCP)		
Alert un-archived data (Alert user of un-archived data)	Yes	None Startup Shutdown
Storage SCP Parameters		
No specific configuration required The configuration of port number and Application Entity Title are part of the Local Application Entity setup (see 4.4.1.1 Local AE Titles).		
Verification SCP Parameters		
No specific configuration required The configuration of port number and Application Entity Title are part of the Local Application Entity setup (see 4.4.1.1 Local AE Titles).		

Copyright: © Carl Zeiss Meditec ,Inc.

5 Media Interchange

Media Interchange is not scope of this document since Media Interchange is not supported by CIRRUS HD-OCT Application Software.

Copyright: © Carl Zeiss Meditec ,Inc.

6 Support of Character Sets

All application entities described in the previous chapters support UTF-8 character set.

Table 6-1 Supported Character Set

Supported Specific Character Set	
Character Set Description	**Defined Term**
UTF-8 encoded Unicode	ISO_IR 192

Copyright: © Carl Zeiss Meditec ,Inc.

7 Security

The DICOM capabilities of the CIRRUS HD-OCT Application Software do not support any specific security measures.

It is assumed that CIRRUS HD-OCT Application Software is used within a secured environment. It is assumed that a secured environment includes at a minimum:

- Firewall or router protections to ensure that only approved external hosts have network access to CIRRUS HD-OCT Application Software
- Firewall or router protections to ensure that CIRRUS HD-OCT Application Software only has network access to approved external hosts and services.
- Any communication with external hosts and services outside the locally secured environment use appropriate secure network channels (e.g. such as a Virtual Private Network (VPN))

Other network security procedures such as automated intrusion detection may be appropriate in some environments. Additional security features may be established by the local security policy and are beyond the scope of this conformance statement.

Copyright: © Carl Zeiss Meditec ,Inc.

8 Annexes

8.1 IOD Contents

8.1.1 Created SOP Instance(s)

Abbreviations used for presence of values:

VNAP
Value Not Always Present (attribute sent zero length if no value is present) – Applicable for Type 2, 2C.

ANAP
Attribute is not always present – Applicable for Type 3

ALWAYS
Attribute is always present with a value – Applicable for Type 1

EMPTY
Attribute is sent without a value – Applicable for Type 2

Abbreviations used for sources of data:

USER
The attribute value source is from User input

AUTO
The attribute value is generated automatically

MWL, MPPS, etc.
The attribute value is the same as the value received using a DICOM service such as Modality Worklist, Modality Performed Procedure Step, etc.

CONFIG
The attribute value source is a configurable parameter

ACQUISITION
The sources of data come from data acquisition process. Include Image and data relate to Image

ANALYSIS
The sources of data come from data generate by application or add/edit/update by user when images are analyzed.

SRQ
The attribute value is same as the value received using a DICOM service such as Study Root Query.

Copyright: © Carl Zeiss Meditec ,Inc.

8.1.1.1 Encapsulated PDF IOD

IE	Module	Usage
Patient		
	Patient	ALWAYS
	Clinical Trial Subject	NEVER
Study		
	General Study	ALWAYS
	Patient Study	NEVER
	Clinical Trial Study	NEVER
Series		
	Encapsulated Document Series	ALWAYS
	Clinical Trial Series	NEVER
Equipment		
	General Equipment	ALWAYS
	SC Equipment	ALWAYS
	CzmEncapsulatedPdfSeriesExtension	ALWAYS
EncapsulatedDocument		
	Encapsulated Document	ALWAYS
	SOP Common	ALWAYS
	CzmEncapsulatedPdfInstanceExtension	NEVER
	SpecializedEncapsulatedDocument	NEVER

Table 8-1 Encapsulated PDF IOD - Module "Patient"

Tag	Type	VR	Name	Description	PoV	Source
(0010,0010)	2	PN	Patient's Name	Patient's full name.	ALWAYS	MWL, USER, SRQ
(0010,0020)	2	LO	Patient ID	Primary hospital identification number or code for the patient.	ALWAYS	MWL, USER, SRQ
(0010,0021)	3	LO	Issuer of Patient ID	Identifier of the Assigning Authority (system, organization, agency, or department) that issued the Patient ID. Note: Equivalent to HL7 v2 CX component 4 subcomponent 1.	ANAP	MWL,SRQ
(0010,0030)	2	DA	Patient's Birth Date	Birth date of the patient.	ALWAYS	MWL, USER, SRQ
(0010,0040)	2	CS	Patient's Sex	Sex of the named patient. Enumerated Values: M = male F = female O = other	VNAP	MWL, USER, SRQ
(0010,4000)	3	LT	Patient Comments	User-defined additional information about the patient.	ANAP	MWL,USER

Copyright: © Carl Zeiss Meditec ,Inc.

Table 8-2 Encapsulated PDF IOD - Module "General Study"

Tag	Type	VR	Name	Description	PoV	Source
(0020,000D)	1	UI	Study Instance UID	Unique identifier for the Study. Uses value as given by the Modality Worklist service in scheduled case. The software creates the UID in the unscheduled case. Then it uses “1.2.276.0.75.2.2.42.” as constant prefix for generated UIDs for CIRRUS HD-OCT Model 5000 “1.2.276.0.75.2.2.43.” as constant prefix for generated UIDs for CIRRUS HD-OCT Model 500 Uses value as given by the source Raw Data when it is originated from other devices.	ALWAYS	MWL, AUTO
(0008,0020)	2	DA	Study Date	Date the Study started.	ALWAYS	AUTO
(0008,0030)	2	TM	Study Time	Time the Study started.	ALWAYS	AUTO
(0008,0090)	2	PN	Referring Physician's Name	Name of the patient's referring physician. Value does not exist in unscheduled case.	VNAP	MWL
(0020,0010)	2	SH	Study ID	User or equipment generated Study identifier.	ALWAYS	AUTO
(0008,0050)	2	SH	Accession Number	A RIS generated number that identifies the order for the Study. Value does not exist in unscheduled case.	VNAP	MWL
(0008,1030)	3	LO	Study Description	Institution-generated description or classification of the Study (component) performed. In scheduled case, the source attribute for this value is Requested Procedure Description. Value does not exist in unscheduled case.	ANAP	MWL

Table 8-3 Encapsulated PDF IOD - Module “Encapsulated Document Series "

Tag	Type	VR	Name	Description	PoV	Source
(0008,0060)	1	CS	Modality	The modality appropriate for the encapsulated document. This Type definition shall override the definition in the SC Equipment Module. See NEMA PS3.3 Section C.7.3.1.1.1 for Defined Terms. Note: SR may be an appropriate value for an Encapsulated CDA document with a structured XML Body. Default “OPT”, but can be configured to be “OP” for systems that don’t support “OPT”.	ALWAYS	CONFIG
(0020,000E)	1	UI	Series Instance UID	Unique identifier of the Series. “1.2.276.0.75.2.2.42” or “1.2.276.0.75.2.2.43” extended by machine identifier and time information.	ALWAYS	AUTO
(0020,0011)	1	IS	Series Number	A number that identifies the Series.	ALWAYS	AUTO
(0008,103E)	3	LO	Series	Description of the Series.	ALWAYS	AUTO

Copyright: © Carl Zeiss Meditec ,Inc.

			Description	Same value as for Performed Procedure Step Description (0040,0254).		
(0040,0244)	3	DA	Performed Procedure Step Start Date	Date on which the Performed Procedure Step started or Date on which this document instance was created.	ALWAYS	AUTO
(0040,0245)	3	TM	Performed Procedure Step Start Time	Time on which the Performed Procedure Step started or Time on which this document instance was created.	ALWAYS	AUTO
(0040,0254)	3	LO	Performed Procedure Step Description	For Raw Data acquisition objects generated by Cirrus SW versions 11.5 one of the following values will be set: Anterior Segment Cube 512x128 Anterior Segment 5 Line Raster HD 1 Line 100x HD 21 Line HD 5 Line Raster HD Cross HD Radial Anterior Chamber HD Angle HD Cornea Pachymetry Wide Angle to Angle Macular Cube 200x200 Macular Cube 512x128 Optic Disc Cube 200x200 5 Line Raster Angiography 3x3 mm Angiography 6x6 mm Angiography 8x8 mm Montage Angio 6x6 Montage Angio 8x8 ONH Angiography 4.5x4.5 mm Angiography 8x8 mm Constituent Angiography 6x6 mm Constituent For objects from legacy versions other values may be present or the field may be empty.	ALWAYS	AUTO

Table 8-4 Encapsulated PDF IOD - Module “General Equipment"

Tag	Type	VR	Name	Description	PoV	Source
(0008,0070)	2	LO	Manufacturer	Manufacturer of the equipment that produced the composite instances. Always “Carl Zeiss Meditec”	ALWAYS	AUTO
(0008,0080)	3	LO	Institution Name	Institution where the equipment that produced the composite instances is located. Value as configured in Institution Edit dialog.	ALWAYS	CONFIG
(0008,1010)	3	SH	Station Name	User defined name identifying the machine that produced the composite instances. As configured in Equipment Edit dialog.	ANAP	CONFIG
(0008,1090)	3	LO	Manufacturer's Model Name	Manufacturer’s model name of the equipment that produced the composite instances.	ALWAYS	CONFIG

Copyright: © Carl Zeiss Meditec ,Inc.

				As configured at installation time using configuration file. Always “CIRRUS HD-OCT 5000” or “CIRRUS HD-OCT 500”		
(0018,1000)	3	LO	Device Serial Number	Manufacturer’s serial number of the equipment that produced the composite instances. Note: This identifier corresponds to the device that actually created the images, such as a CR plate reader or a CT console, and may not be sufficient to identify all of the equipment in the imaging chain, such as the generator or gantry or plate. The serial number of the instrument in case of an Acquisition Modality. The model number plus license certificate number in case of a Review Station.	ALWAYS	AUTO
(0018,1020)	3	LO	Software Version(s)	Manufacturer’s designation of software version of the equipment that produced the composite instances. See NEMA PS3.3 Section C.7.5.1.1.3. Always <acquisition software version>\<generated software version> Where <generated software version> is “11.5.x.y”	ALWAYS	AUTO

Table 8-5 Encapsulated PDF IOD - Module “SC Equipment"

Tag	Type	VR	Name	Description	PoV	Source
(0008,0064)	1	CS	Conversion Type	Describes the kind of image conversion. Defined Terms : DV = Digitized Video DI = Digital Interface DF = Digitized Film WSD = Workstation SD = Scanned Document SI = Scanned Image DRW = Drawing SYN = Synthetic Image. Always “SYN” for Synthetic Image	ALWAYS	AUTO

Table 8-6 Encapsulated PDF IOD - Module “CzmEncapsulatedPdfSeriesExtension"

Tag	Type	VR	Name	Description	PoV	Source
(0020,0060)	3	CS	Laterality	Laterality of (paired) body part examined. Enumerated Values: R = right, L = left, B = both	ALWAYS	AUTO

Table 8-7 Encapsulated PDF IOD - Module “Encapsulated Document"

Tag	Type	VR	Name	Description	PoV	Source
(0020,0013)	1	IS	Instance Number	A number that identifies this SOP Instance. The value shall be unique within a series. Always “1” since there is always only one instance per series.	ALWAYS	AUTO
(0008,0023)	2	DA	Content Date	The date the document content creation was started.	ALWAYS	AUTO
(0008,0033)	2	TM	Content Time	The time the document content creation was started.	ALWAYS	AUTO
(0008,002A)	2	DT	Acquisition DateTime	The date and time that the original generation of the data in the document started.	ALWAYS	AUTO

Copyright: © Carl Zeiss Meditec ,Inc.

(0028,0301)	1	CS	Burned In Annotation	Indicates whether or not the encapsulated document contains sufficient burned in annotation to identify the patient and date the data was acquired. Enumerated Values: YES NO Identification of patient and date as text in an encapsulated document (e.g., in an XML attribute or element) is equivalent to "burned in annotation". A de-identified document may use the value NO. Always “YES” since there is enough information to identify the patient.	ALWAYS	AUTO
(0042,0013)	1C	SQ	Source Instance Sequence	A sequence that identifies the set of Instances that were used to derive the encapsulated document. One or more Items may be included in this Sequence. Required if derived from one or more DICOM Instances. May be present otherwise.	ALWAYS	AUTO
>(0008,1150)	1	UI	Referenced SOP Class UID	Uniquely identifies the referenced SOP Class.	ALWAYS	AUTO
>(0008,1155)	1	UI	Referenced SOP Instance UID	Uniquely identifies the referenced SOP Instance.	ALWAYS	AUTO
(0042,0010)	2	ST	Document Title	The title of the document. Note: In the case of a PDF encapsulated document, this may be the value of the "Title" entry in the "Document Information Directory" as encoded in the PDF data. There are 2 choices available here for Document Title: For ANALYSIS_OU_ONH_AND_RNFL analysis use the naming convention as shown below : “CIRRUS_OU_ ONH and RNFL OU Analysis” For all other analysis, use the following naming convention: <eye site>+ “ “ + <analysis name>, where <eye site> can be one of values: “OD” “OS” “OU” <analysis name> can be one of values: “Advanced Visualization” , “Anterior Segment Analysis”, “Macular Thickness Analysis”, “Guided Progression Analysis”, “Guided Progression Analysis - Ganglion Cell “, “Macular Change Analysis”, “3D Visualization”, “Single Eye Summary”, "Ganglion Cell OU Analysis", "Advanced RPE Analysis", “HD Angle Analysis”, “HD Cornea Analysis”, “Anterior Chamber Analysis”, “Wide Angle to Angle Analysis”, “Pachymetry Analysis”, “PanoMap”, “En Face Analysis”, “5 Line Raster”, “Anterior Segment 5 Line Raster”, “HD 1 Line 100x”, “HD 21 Line”, “HD 5 Line Raster”, “HD Cross”, "HD Radial", “Angiography Analysis”, “Angiography Change Analysis”, "Montage Angio Analysis", "ONH Angiography Analysis", "ONH Angiography Change Analysis"	ALWAYS	AUTO
(0040,A043)	2	SQ	Concept Name Code	A coded representation of the document title. Zero or one item may be present.	ALWAYS	AUTO

Copyright: © Carl Zeiss Meditec ,Inc.

			Sequence	Always empty.		
(0042,0012)	1	LO	MIME Type of Encapsulated Document	The type of the encapsulated document stream described using the MIME Media Type (see RFC 2046). Always “application/pdf”	ALWAYS	AUTO
(0042,0011)	1	OB	Encapsulated Document	Encapsulated Document stream, containing a document encoded according to the MIME Type.	ALWAYS	AUTO

Table 8-8 Encapsulated PDF IOD - Module “’SOP Common"

Tag	Type	VR	Name	Description	PoV	Source
(0008,0016)	1	UI	SOP Class UID	Uniquely identifies the SOP Class. See NEMA PS3.3 C.12.1.1.1 for further explanation. See also PS 3.4. Always “1.2.840.10008.5.1.4.1.1.104.1”	ALWAYS	AUTO
(0008,0018)	1	UI	SOP Instance UID	Uniquely identifies the SOP Instance. See NEMA PS3.3 C.12.1.1.1 for further explanation. See also PS 3.4. “1.2.276.0.75.2.2.42.” or “1.2.276.0.75.2.2.43.” as constant prefix for generated UIDs	ALWAYS	AUTO
(0008,0005)	1C	CS	Specific Character Set	Character Set that expands or replaces the Basic Graphic Set. Required if an expanded or replacement character set is used. See NEMA PS3.3 C.12.1.1.2 for Defined Terms. Always “ISO_IR 192” for UTF-8 encoded Unicode.	ALWAYS	AUTO
(0008,0012)	3	DA	Instance Creation Date	Date the SOP Instance was created.	ALWAYS	AUTO
(0008,0013)	3	TM	Instance Creation Time	Time the SOP Instance was created.	ALWAYS	AUTO

Copyright: © Carl Zeiss Meditec ,Inc.

8.1.1.2 Ophthalmic Photography 8 Bit Information Object Definition

IE	Module	Usage
Patient		
	Patient	ALAWAYS
	Clinical Trial Subject	NEVER
Study		
	General Study	ALWAYS
	Patient Study	NEVER
	Clinical Trial Study	NEVER
Series		
	General Series	ALWAYS
	Ophthalmic Photography Series	ALWAYS
	Clinical Trial Series	NEVER
Frame Of Reference		
	Synchronization	ALWAYS
Equipment		
	General Equipment	ALWAYS
Image		
	General Image	ALWAYS
	Image Pixel	ALWAYS
	Enhanced Contrast Bolus	NEVER
	Cine	NEVER
	Multiframe	ALWAYS
	Device	NEVER
	Acquisition Context	NEVER
	Ophthalmic Photography Image	ALWAYS
	Ocular Region Imaged	ALWAYS
	Ophthalmic Photography Acquisition Parameters	ALWAYS
	Ophthalmic Photographic Parameters	ALWAYS
	IccProfile	NEVER
	SOP Common	ALWAYS
	Frame Extraction	NEVER
	CzmOphthalmicPhotographyImageExtension	NEVER

Copyright: © Carl Zeiss Meditec ,Inc.

Table 8-9 Ophthalmic Photography IOD - Module "Patient"

Tag	Type	VR	Name	Description	PoV	Source
(0010,0010)	2	PN	Patient's Name	Patient's full name.	ALWAYS	MWL, USER, SRQ
(0010,0020)	2	LO	Patient ID	Primary hospital identification number or code for the patient.	ALWAYS	MWL,USER,SRQ
(0010,0021)	3	LO	Issuer of Patient ID	Identifier of the Assigning Authority (system, organization, agency, or department) that issued the Patient ID. Note: Equivalent to HL7 v2 CX component 4 subcomponent 1.	ANAP	MWL,SRQ
(0010,0030)	2	DA	Patient's Birth Date	Birth date of the patient.	ALWAYS	MWL, USER, SRQ
(0010,0040)	2	CS	Patient's Sex	Sex of the named patient. Enumerated Values: M = male F = female O = other	VNAP	MWL, USER, SRQ
(0010,4000)	3	LT	Patient Comments	User-defined additional information about the patient.	ANAP	MWL,USER

Table 8-10 Ophthalmic Photography IOD - Module "General Study"

Tag	Type	VR	Name	Description	PoV	Source
(0020,000D)	1	UI	Study Instance UID	Unique identifier for the Study. Uses value as given by the Modality Worklist service in scheduled case. The software creates the UID in the unscheduled case. Then it uses “1.2.276.0.75.2.2.42.” as DICOM root prefix for generated UIDs for CIRRUS HD-OCT Model 5000. “1.2.276.0.75.2.2.43.” as DICOM root prefix for generated UIDs for CIRRUS HD-OCT Model 500. Uses value as given by the source Raw Data when it is originated from other devices.	ALWAYS	MWL,AUTO
(0008,0020)	2	DA	Study Date	Date the Study started.	ALWAYS	AUTO
(0008,0030)	2	TM	Study Time	Time the Study started.	ALWAYS	AUTO
(0008,0090)	2	PN	Referring Physician's Name	Name of the patient's referring physician. Value does not exist in unscheduled case.	VNAP	MWL
(0020,0010)	2	SH	Study ID	User or equipment generated Study identifier.	ALWAYS	AUTO
(0008,0050)	2	SH	Accession Number	A RIS generated number that identifies the order for the Study. Value does not exist in unscheduled case.	VNAP	MWL

Table 8-11 Ophthalmic Photography IOD - Module “General Series"

Tag	Type	VR	Name	Description	PoV	Source
(0020,000E)	1	UI	Series	Unique identifier of the	ALWAYS	AUTO

Copyright: © Carl Zeiss Meditec ,Inc.

			Instance UID	Series. “1.2.276.0.75.2.2.42” or “1.2.276.0.75.2.2.43” extended by machine identifier and time information.		
(0020,0011)	2	IS	Series Number	A number that identifies this Series.	ALWAYS	AUTO
(0020,0060)	2C	CS	Laterality	Laterality of (paired) body part examined. Required if the body part examined is a paired structure and Image Laterality (0020,0062) or Frame Laterality (0020,9072) are not sent. Enumerated Values: R = right L = left Note: Some IODs support Image Laterality (0020,0062) at the Image level or Frame Laterality(0020,9072) at the Frame level in the Frame Anatomy functional group macro, which can provide a more comprehensive mechanism for specifying the laterality of the body part(s) being examined. Site=”OD”, Laterality=”R” Site=”OS”, Laterality=”L” Site=”OU”, Laterality=”B” Site=””, Laterality=”U”(unknown)	ALWAYS	AUTO
(0008,0021)	3	DA	Series Date	Date the Series started.	ALWAYS	AUTO
(0008,0031)	3	TM	Series Time	Time the Series started.	ALWAYS	AUTO
(0008,103E)	3	LO	Series Description	Description of the Series Following values are possible: Macular Cube 200x200 Macular Cube 512x128 5 Line Raster HD 5 Line Raster RASTER_SINGLE, RASTER_21_LINES, RASTER_GRID, RASTER_RADIAL	ALWAYS	AUTO
(0008,103F)	3	SQ	Series Description Code Sequence	A coded description of the Series. Sequence contains only 1 item which provides the scan pattern type information.	ALWAYS	AUTO

Copyright: © Carl Zeiss Meditec ,Inc.

>(0008,0100)	1	SH	Code Value	Defined terms: MACULAR_CUBE RASTER RASTER_HD RASTER_SINGLE RASTER_21_LINES RASTER_GRID RASTER_RADIAL	ALWAYS	AUTO
>(0008,0102)	1	SH	Coding Scheme Designator	Always “99CZM”	ALWAYS	AUTO
>(0008,0103)	1C	SH	Coding Scheme Version	Always “20120401” for RASTER_HD, RASTER and MACULAR_CUBE Always "20141009" for "RASTER_SINGLE", RASTER_RADIAL, RASTER_GRID, RASTER_21_LINES	ALWAYS	AUTO
>(0008,0104)	1	LO	Code Meaning	See Section 8.3. Defined terms: “Macular Cube Scan”, “Raster Scan”, "Raster HD Scan" "HD 1 Line 100x Scan", "HD 21 Line Scan", "HD Cross Scan", "HD Radial Scan". Value corresponds to the code value.	ALWAYS	AUTO
(0008,1070)	3	PN	Operators' Name	Name(s) of the operator(s) supporting the Series.	ALWAYS	AUTO
(0040,0275)	3	SQ	Request Attributes Sequence	Sequence that contains attributes from the Imaging Service Request. The sequence may have one or more Items. This sequence is only included in Scheduled Case. In unscheduled case it will not be included.	ANAP	AUTO
>(0040,1001)	1C	SH	Requested Procedure ID	Identifier that identifies the Requested Procedure in the Imaging Service Request. Required if procedure was scheduled. May be present otherwise. Note: The condition is to allow the contents of this macro to be present (e.g., to convey the reason for the procedure, such as whether a mammogram is for screening or diagnostic purposes) even when the procedure was not formally	ALWAYS	MWL

Copyright: © Carl Zeiss Meditec ,Inc.

				scheduled and a value for this identifier is unknown, rather than making up a dummy value.		
>(0008,0050)	3	SH	Accession Number	An identifier of the Imaging Service Request for this Requested Procedure.	ANAP	MWL
>(0020,000D)	3	UI	Study Instance UID	The unique identifier for the Study provided for this Requested Procedure.	ALWAYS	MWL
>(0032,1060)	3	LO	Requested Procedure Description	Institution-generated administrative description or classification of Requested Procedure. Value as given by the Modality Worklist item that was accepted for this examination (scan and analysis).	ANAP	MWL
(0040,0244)	3	DA	Performed Procedure Step Start Date	Date on which the Performed Procedure Step started.	ALWAYS	AUTO
(0040,0245)	3	TM	Performed Procedure Step Start Time	Time on which the Performed Procedure Step started.	ALWAYS	AUTO
(0040,0254)	3	LO	Performed Procedure Step Description	Following values are possible: Macular Cube 200x200 Macular Cube 512x128 5 Line Raster HD 5 Line Raster HD 1 Line 100X, HD 21 Line, HD Cross, HD Radial	ALWAYS	AUTO

Table 8-12 Ophthalmic Photography IOD - Module “Ophthalmic Photography Series"

Tag	Type	VR	Name	Description	PoV	Source
(0008,0060)	1	CS	Modality	Source equipment that produced the Ophthalmic Photography Series. Enumerated Value: OP	ALWAYS	AUTO

Table 8-13 Ophthalmic Photography IOD - Module “Synchronization "

Tag	Type	VR	Name	Description	PoV	Source
(0020,0200)	1	UI	Synchronization Frame of Reference UID	UID of common synchronization environment. See NEMA PS3.3 C.7.4.2.1.1.	ALWAYS	AUTO
(0018,106A)	1	CS	Synchronization Trigger	Data acquisition synchronization with external equipment Enumerated Values: SOURCE - this	ALWAYS	AUTO

Copyright: © Carl Zeiss Meditec ,Inc.

				equipment provides synchronization channel or trigger to other equipment EXTERNAL - this equipment receives synchronization channel or trigger from other equipment PASSTHRU - this equipment receives synchronization channel or trigger and forwards it NO TRIGGER - data acquisition not synchronized by common channel or trigger. Value is always “NO TRIGGER”		
(0018,1800)	1	CS	Acquisition Time Synchronized	Acquisition DateTime (0008,002A) synchronized with external time reference. Enumerated Values: Y, N See NEMA PS3.3 C.7.4.2.1.4 Value is always NO	ALWAYS	AUTO

Table 8-14 Ophthalmic Photography IOD - Module “General Equipment "

Tag	Type	VR	Name	Description	PoV	Source
(0008,0070)	2	LO	Manufacturer	Manufacturer of the equipment that produced the composite instances. Value is always “Carl Zeiss Meditec”	ALWAYS	AUTO
(0008,0080)	3	LO	Institution Name	Institution where the equipment that produced the composite instances is located. Value as configured in Institution Edit dialog.	ALWAYS	CONFIG
(0008,1010)	3	SH	Station Name	User defined name identifying the machine that produced the composite instances. As configured in Equipment Edit dialog.	ANAP	CONFIG
(0008,1090)	3	LO	Manufacturer's Model Name	Manufacturer’s model name of the equipment that produced the composite instances. Always “CIRRUS HD-OCT 5000” or “CIRRUS HD-OCT 500”	ALWAYS	CONFIG
(0018,1000)	3	LO	Device Serial Number	Manufacturer’s serial number of the equipment that produced the composite instances. Note: This identifier corresponds to the device that actually created the images, such as a CR plate reader or a CT console, and may not be sufficient to identify all of the equipment in the imaging chain, such as the generator or gantry or plate. The serial number of the instrument in case of an Acquisition Modality. The model number plus license certificate number in case of a Review Station.	ALWAYS	AUTO
(0018,1020)	3	LO	Software Version(s)	Manufacturer’s designation of software version of the equipment that produced the composite instances. See Section C.7.5.1.1.3. Always <acquisition software version>\<generated software version> Where <generated software version> is “11.5.x.y”	ALWAYS	AUTO

Table 8-15 Ophthalmic Photography IOD - Module “General Image"

Tag	Type	VR	Name	Description	PoV	Source

Copyright: © Carl Zeiss Meditec ,Inc.

(0020,0020)	2C	CS	Patient Orientation	Patient direction of the rows and columns of the image. Required if image does not require Image Orientation (Patient) (0020,0037) and Image Position (Patient) (0020,0032). May be present otherwise. See NEMA PS3.3 C.7.6.1.1.1 for further explanation. Note: IOD's may have attributes other than Patient Orientation, Image Orientation, or Image Position (Patient) to describe orientation in which case this attribute will be zero length. Value is L/F	ALWAYS	AUTO
(0008,2111)	3	ST	Derivation Description	A text description of how this image was derived. See NEMA PS3.3 C.7.6.1.1.3 for further explanation. Value is JPEG 2000	ALWAYS	AUTO
(0008,114A)	3	SQ	Referenced Instance Sequence	Non-image composite SOP Instances that are significantly related to this Image, including waveforms that may or may not be temporally synchronized with this image. One or more Items may be included in this sequence.	ALWAYS	AUTO
>(0008,1150)	1	UI	Referenced SOP Class UID	Uniquely identifies the referenced SOP Class. "1.2.840.10008.5.1.4.1.1.66" as we refer to a DICOM RAW instance.	ALWAYS	AUTO
>(0008,1155)	1	UI	Referenced SOP Instance UID	Uniquely identifies the referenced SOP Instance. References the Instance_UID of the RAW acquisition data	ALWAYS	AUTO
>(0040,A170)	1	SQ	Purpose of Reference Code Sequence	Code describing the purpose of the reference to the Instance(s). Only a single Item shall be permitted in this sequence.	ALWAYS	AUTO
>>(0008,0100)	1	SH	Code Value	"122400"	ALWAYS	AUTO
>>(0008,0102)	1	SH	Coding Scheme Designator	See Section 8.2. " DCM"	ALWAYS	AUTO
>>(0008,0103)	1C	SH	Coding Scheme Version	See Section 8.2. Required if the value of Coding Scheme Designator (0008,0102) is not sufficient to identify the Code Value (0008,0100) unambiguously. May be present otherwise. "20030619"	ALWAYS	AUTO
>>(0008,0104)	1	LO	Code Meaning	See Section 8.3. "Simultaneously Acquired"	ALWAYS	AUTO

Table 8-16 Ophthalmic Photography IOD - Module "Image Pixel"

Tag	Type	VR	Name	Description	PoV	Source
(0028,0010)	1	US	Rows	Number of rows in the image.	ALWAYS	ACQUISITION
(0028,0011)	1	US	Columns	Number of columns in the image	ALWAYS	ACQUISITION
(0028,0100)	1	US	Bits Allocated	Number of bits allocated for each pixel sample. Each sample shall have the same number of bits allocated. See PS 3.5 for	ALWAYS	AUTO

Copyright: © Carl Zeiss Meditec ,Inc.

				further explanation. Always “8”		
(0028,0101)	1	US	Bits Stored	Number of bits stored for each pixel sample. Each sample shall have the same number of bits stored. See PS 3.5 for further explanation. Always 8”	ALWAYS	AUTO
(0028,0102)	1	US	High Bit	Most significant bit for pixel sample data. Each sample shall have the same high bit. See PS 3.5 for further explanation. Always “7”	ALWAYS	AUTO
(7FE0,0010)	1C	OB|OW	Pixel Data	A data stream of the pixel samples that comprise the Image. See NEMA PS3.3 C.7.6.3.1.4 for further explanation. Required if Pixel Data Provider URL (0028,7FE0) is not present.	ALWAYS	ACQUISITION

Table 8-17 Ophthalmic Photography IOD - Module “Multiframe"

Tag	Type	VR	Name	Description	PoV	Source
(0028,0008)	1	IS	Number of Frames	Number of frames in a Multi-frame Image. Always “1”.	ALWAYS	AUTO
(0028,0009)	1	AT	Frame Increment Pointer	Contains the Data Element Tag of the attribute that is used as the frame increment in Multi-frame pixel data. (0018,1063)..	ALWAYS	AUTO

Table 8-18 Ophthalmic Photography IOD - Module “Ophthalmic Photography Image"

Tag	Type	VR	Name	Description	PoV	Source
(0008,0008)	1	CS	Image Type	Image identification characteristics. See NEMA PS3.3 C.8.17.2.1.4 for specialization. Image identification characteristics. Multi-Valued element: 1st “ORIGINAL” The value is set to “DERIVED” when both the following conditions are met: • "Track to Prior" feature was used on a CIRRUS HD-OCT Model 5000 • The rotation angle to the referenced scan is not "0" 2nd “PRIMARY” 3rd “” (empty) 4th Scan Type, where for CIRRUS the value for Scan Type is one of the following: “MAC CUBE 512X128”, “MAC CUBE 200X200”, “5 LINE RASTER”, “HD 5 LINE RASTER”, “HD 1 Line 100X”,	ALWAYS	AUTO

Copyright: © Carl Zeiss Meditec ,Inc.

				"HD 21 LINE", "HD CROSS", "HD RADIAL"		
(0020,0013)	1	IS	Instance Number	A number that identifies this image.	ALWAYS	AUTO
(0028,0002)	1	US	Samples per Pixel	Number of samples (planes) in this image. Enumerated values: 1 or 3. See NEMA PS3.3 C.8.17.2.1.2 for further explanation. Always “1”	ALWAYS	AUTO
(0028,0004)	1	CS	Photometric Interpretation	Specifies the intended interpretation of the pixel data. See section C.8.17.2.1.3 Always “MONOCHROME2”	ALWAYS	AUTO
(0028,0103)	1	US	Pixel Representation	Data representation of the pixel samples. Each sample shall have the same pixel representation. Enumerated Values:0000 = unsigned integer.0001 = 2's complement Always “0000”	ALWAYS	AUTO
(0028,0030)	1C	DS	Pixel Spacing	Nominal physical distance at the focal plane (in the retina) between the center of each pixel, specified by a numeric pair - adjacent row spacing (delimiter) adjacent column spacing in mm. See 10.7.1.3 for further explanation of the value order. Note: These values are specified as nominal because the physical distance may vary across the field of the images and the lens correction is likely to be imperfect. Required when Acquisition Device Type Code Sequence (0022,0015) contains an item with the value (SRT, R-1021A,"Fundus Camera"). May be present otherwise. Always present.	ALWAYS	AUTO
(0008,0033)	1	TM	Content Time	The time the image pixel data creation started.	ALWAYS	AUTO
(0008,0023)	1	DA	Content Date	The date the image pixel data creation started.	ALWAYS	AUTO
(0008,002A)	1C	DT	Acquisition Datetime	The date and time that the acquisition of data started. Note: The synchronization of this time with an external clock is specified in the synchronization Module in Acquisition Time Synchronized (0018,1800). Required if Image Type (0008,0008) Value 1 is ORIGINAL. May be present otherwise.	ALWAYS	AUTO
(0028,2110)	1	CS	Lossy Image Compression	Specifies whether an Image has undergone lossy compression. Enumerated Values: 00 = Image has NOT been subjected to lossy compression. 01 = Image has been subjected to lossy compression. See NEMA PS3.3 C.7.6.1.1.5 Always “01”	ALWAYS	AUTO
(0028,2112)	1C	DS	Lossy Image Compression Ratio	Describes the approximate lossy compression ratio(s) that have been applied to this image. See NEMA PS3.3 C.7.6.1.1.5 for further explanation. May be multivalued if successive lossy compression steps have been applied. Notes: 1. For example, a compression ratio of 30:1 would be	ALWAYS	AUTO

Copyright: © Carl Zeiss Meditec ,Inc.

				described in this Attribute with a single value of 30. 2. For historical reasons, the lossy compression ratio should also be described in Derivation Description (0008,2111) Required if Lossy Image Compression (0028,2110) has a value of "01". Value range; 0.0F-10.0F. 0: means no compression 1: means lossless >1 means lossy with compressed ratio Always “2”		
(0028,2114)	1C	CS	Lossy Image Compression Method	A label for the lossy compression method(s) that have been applied to this image. See NEMA PS3.3 C.7.6.1.1.5 for further explanation. May be multivalued if successive lossy compression steps have been applied; the value order shall correspond to the values of Lossy Image Compression Ratio (0028,2112). Required if Lossy Image Compression (0028,2110) has a value of "01". Note: For historical reasons, the lossy compression method should also be described in Derivation Description (0008,2111). “ISO_15444_1”	ALWAYS	AUTO
(2050,0020)	1C	CS	Presentation LUT Shape	Specifies an identity transformation for the Presentation LUT, such that the output of all grayscale transformations defined in the IOD containing this Module are defined to be P-Values. Enumerated Values: IDENTITY - output is in P-Values. Required if Photometric Interpretation (0028,0004) is MONOCHROME2 “IDENTITY”	ALWAYS	AUTO
(0028,0301)	1	CS	Burned In Annotation	Indicates whether or not image contains sufficient burned in annotation to identify the patient and date the image was acquired. Enumerated Value: YES NO “NO”	ALWAYS	AUTO

Table 8-19 Ophthalmic Photography IOD - Module “Ocular Region Imaged "

Tag	Type	VR	Name	Description	PoV	Source
(0020,0062)	1	CS	Image Laterality	Laterality of object imaged (as described in Anatomic Region Sequence (0008,2218)) examined. Enumerated Values: R = right eye L = left eye B = both left and right eye	ALWAYS	AUTO
(0008,2218)	1	SQ	Anatomic Region Sequence	Sequence that identifies the anatomic region of interest in this Instance (i.e. external anatomy, surface anatomy, or general region of the body). Only a single Item shall be permitted in this sequence.	ALWAYS	AUTO
>(0008,0100)	1	SH	Code Value	T-AA610 for Retina, T-AA200 for Cornea, T-AA50 for Anterior chamber of eye	ALWAYS	AUTO
>(0008,0102)	1	SH	Coding	”SRT”	ALWAYS	AUTO

Copyright: © Carl Zeiss Meditec ,Inc.

			Scheme Designator			
>(0008,0104)	1	LO	Code Meaning	"Retina" for Retina, “Cornea” for Cornea, “Anterior chamber of the eye” for anterior chamber.	ALWAYS	AUTO

Table 8-20 Ophthalmic Photography IOD - Module “Ophthalmic Photography Acquisition Parameters "

Tag	Type	VR	Name	Description	PoV	Source
(0022,0005)	2	CS	Patient Eye Movement Commanded	Enumerated Values: YES NO Always “NO”	ALWAYS	AUTO
(0022,001B)	2	SQ	Refractive State Sequence	The refractive state of the imaged eye at the time of acquisition. Zero or one Item shall be present. Zero length means the refractive state was not measured.	EMPTY	AUTO
(0022,000A)	2	FL	Emmetropic Magnification	Emmetropic magnification value (dimensionless). Zero length means the emmetropic magnification was not measured.	EMPTY	AUTO
(0022,000B)	2	FL	Intra Ocular Pressure	Value of intraocular pressure in mmHg. Zero length means the pressure was not measured	EMPTY	AUTO
(0022,000D)	2	CS	Pupil Dilated	Enumerated Values: YES NO If this tag is empty, no information is available. Always “NO”	ALWAYS	AUTO

Table 8-21 Ophthalmic Photography IOD - Module “Ophthalmic Photographic Parameters "

Tag	Type	VR	Name	Description	PoV	Source
(0022,0015)	1	SQ	Acquisition Device Type Code Sequence	Describes the type of acquisition device. A single item shall be present in the sequence.	ALWAYS	AUTO
>(0008,0100)	1	SH	Code Value	For CIRRUS Model 5000: “LSO” For CIRRUS Model 500: “A-00FBE“	ALWAYS	AUTO
>(0008,0102)	1	SH	Coding Scheme Designator	For CIRRUS Model 5000: “99CZM_ACQDEVTYPE” For CIRRUS Model 500: “SRT”	ALWAYS	AUTO
>(0008,0103)	1C	SH	Coding Scheme Version	For CIRRUS Model 5000: “20120703” For CIRRUS Model 500: “20071016”	ALWAYS	AUTO
>(0008,0104)	1	LO	Code Meaning	For CIRRUS Model 5000 : “Line Scanning Ophthalmoscope” For CIRRUS Model 500: ”Optical Coherence Tomography Scanner”	ALWAYS	AUTO
(0022,0016)	2	SQ	Illumination Type Code Sequence	Coded value for illumination. Zero or one item shall be present in the sequence.	EMPTY	AUTO
(0022,0017)	2	SQ	Light Path Filter Type Stack Code	Filters used in the light source path. Zero or more items may be present in the sequence.	EMPTY	AUTO

Copyright: © Carl Zeiss Meditec ,Inc.

			Sequence			
(0022,0018)	2	SQ	Image Path Filter Type Stack Code Sequence	Describes stack of filters used in image path. Zero or more items may be present in the sequence.	EMPTY	AUTO
(0022,0019)	2	SQ	Lenses Code Sequence	Lenses that were used during the image acquisition. Zero or more items may be present in the sequence.	ALWAYS	AUTO
>(0008,0100)	1	SH	Code Value	Always “R-10219”		
>(0008,0102)	1	SH	Coding Scheme Designator	Always “SRT”	ALWAYS	AUTO
>(0008,0104)	1	LO	Code Meaning	See Section 8.3. Always: Indirect ophthalmoscopy lens	ALWAYS	AUTO
(0018,7004)	2	CS	Detector Type	Type of detector used for creating this image. Defined terms: CCD = Charge Coupled Devices CMOS = Complementary Metal Oxide Semiconductor	EMPTY	AUTO
(0022,001A)	1C	SQ	Channel Description Code Sequence	Describes the light color used for each channel to generate the image. Required if this differs from the natural interpretation. Note: Interpretation and representation of RGB images rely on the assumption that the red channel really contains the red wavelength range of illumination light, the blue channel the blue wavelength range, etc. Some modalities use the RGB Photometric Interpretation as a container representing 3 channels of any illumination wavelength. Shall have the same number of items as the Value of Samples per Pixel Used (0028,0003) if present, or otherwise the value of Samples per Pixel (0028,0002). The channels shall be described in the order in which the channels are encoded.	ALWAYS	AUTO
>(0008,0100)	1	SH	Code Value	Always “R-102BE”	ALWAYS	AUTO
>(0008,0102)	1	SH	Coding Scheme Designator	Always “SRT”	ALWAYS	AUTO
>(0008,0104)	1	LO	Code Meaning	Always “Infrared”	ALWAYS	AUTO

Table 8-22 Ophthalmic Photography IOD - Module “SOP Common "

Tag	Type	VR	Name	Description	PoV	Source
(0008,0016)	1	UI	SOP Class UID	Uniquely identifies the SOP Class. See NEMA PS3.3 C.12.1.1.1 for further explanation. See also PS 3.4. Always “1.2.840.10008.5.1.4.1.1.77.1.5.1”	ALWAYS	AUTO
(0008,0018)	1	UI	SOP Instance UID	Uniquely identifies the SOP Instance. See NEMA PS3.3 C.12.1.1.1 for further explanation. See also PS 3.4. UIDs“1.2.276.0.75.2.2.42” or “1.2.276.0.75.2.2.43” extended by machine identifier and time information and	ALWAYS	AUTO

Copyright: © Carl Zeiss Meditec ,Inc.

				*.1 for OP image		
(0008,0005)	1C	CS	Specific Character Set	Character Set that expands or replaces the Basic Graphic Set. Required if an expanded or replacement character set is used. See NEMA PS3.3 C.12.1.1.2 for Defined Terms. Always “ISO_IR 192” for UTF-8 encoded Unicode.	ALWAYS	AUTO
(0008,0012)	3	DA	Instance Creation Date	Date the SOP Instance was created.	ALWAYS	AUTO
(0008,0013)	3	TM	Instance Creation Time	Time the SOP Instance was created.	ALWAYS	AUTO

Copyright: © Carl Zeiss Meditec ,Inc.

8.1.1.3 Ophthalmic Tomography Information Object Definition

IE	Module	Usage
Patient		
	Patient	ALWAYS
	Clinical Trial Subject	NEVER
Study		
	General Study	ALWAYS
	Patient Study	NEVER
	Clinical Trial Study	NEVER
Series		
	General Series	ALWAYS
	Clinical Trial Series	NEVER
	Ophthalmic Tomography Series	ALWAYS
Frame Of Reference		
	Frame Of Reference	ALWAYS
	Synchronization	ALWAYS
Equipment		
	General Equipment	ALWAYS
	Enhanced General Equipment	ALWAYS
Image		
	Image Pixel	ALWAYS
	Enhanced Contrast Bolus	NEVER
	Multiframe Functional Groups	ALWAYS
	Multiframe Dimension	ALWAYS
	Acquisition Context	ALWAYS
	Cardiac Synchronization	NEVER
	Ophthalmic Tomography Image	ALWAYS
	Ophthalmic Tomography Acquisition Parameters	ALWAYS
	Ophthalmic Tomography Parameters	ALWAYS
	Ocular Region Imaged	ALWAYS
	SOP Common	ALWAYS
	Frame Extraction	NEVER

Table 8-23 Ophthalmic Tomography IOD – Module "Patient"

Tag	Type	VR	Name	Description	PoV	Source
(0010,0010)	2	PN	Patient's Name	Patient's full name.	ALWAYS	MWL, USER, SRQ
(0010,0020)	2	LO	Patient ID	Primary hospital identification number or code for the patient.	ALWAYS	MWL, USER, SRQ

Copyright: © Carl Zeiss Meditec ,Inc.

(0010,0021)	3	LO	Issuer of Patient ID	Identifier of the Assigning Authority (system, organization, agency, or department) that issued the Patient ID. Note: Equivalent to HL7 v2 CX component 4 subcomponent 1.	ANAP	MWL, SRQ
(0010,0030)	2	DA	Patient's Birth Date	Birth date of the patient.	ALWAYS	MWL, USER, SRQ
(0010,0040)	2	CS	Patient's Sex	Sex of the named patient. Enumerated Values: M = male F = female O = other	VNAP	MWL, USER, SRQ
(0010,4000)	3	LT	Patient Comments	User-defined additional information about the patient.	ANAP	MWL,USER

Table 8-24 Ophthalmic Tomography IOD – Module "General Study"

Tag	Type	VR	Name	Description	PoV	Source
(0020,000D)	1	UI	Study Instance UID	Unique identifier for the Study. Uses value as given by the Modality Worklist service in scheduled case. The software creates the UID in the unscheduled case. Then it uses "1.2.276.0.75.2.2.42." as DICOM root prefix for generated UIDs for CIRRUS HD-OCT Model 5000. "1.2.276.0.75.2.2.43." as DICOM root prefix for generated UIDs for CIRRUS HD-OCT Model 500. Uses value as given by the source Raw Data when it is originated from other devices.	ALWAYS	MWL, AUTO
(0008,0020)	2	DA	Study Date	Date the Study started.	ALWAYS	AUTO
(0008,0030)	2	TM	Study Time	Time the Study started.	ALWAYS	AUTO
(0008,0090)	2	PN	Referring Physician's Name	Name of the patient's referring physician. Value does not exist in unscheduled case.	VNAP	MWL
(0020,0010)	2	SH	Study ID	User or equipment generated Study identifier.	ALWAYS	AUTO
(0008,0050)	2	SH	Accession Number	A RIS generated number that identifies the order for the Study. Value does not exist in unscheduled case.	VNAP	MWL

Copyright: © Carl Zeiss Meditec ,Inc.

Table 8-25 Ophthalmic Tomography IOD – Module "General Series"

Tag	Type	VR	Name	Description	PoV	Source
(0020,000E)	1	UI	Series Instance UID	Unique identifier of the Series. "1.2.276.0.75.2.2.42" or "1.2.276.0.75.2.2.43" extended by machine identifier and time information.	ALWAYS	AUTO
(0020,0060)	2C	CS	Laterality	Laterality of (paired) body part examined. Required if the body part examined is a paired structure and Image Laterality (0020,0062) or Frame Laterality (0020,9072) are not sent. Enumerated Values: R = right L = left Note: Some IODs support Image Laterality (0020,0062) at the Image level or Frame Laterality(0020,9072) at the Frame level in the Frame Anatomy functional group macro, which can provide a more comprehensive mechanism for specifying the laterality of the body part(s) being examined. Value is: Site="OD", Laterality="R" Site="OS", Laterality="L" Site="OU", Laterality="B" Site="", Laterality="U"(unknown)	ALWAYS	AUTO
(0008,0021)	3	DA	Series Date	Date the Series started.	ALWAYS	AUTO
(0008,0031)	3	TM	Series Time	Time the Series started.	ALWAYS	AUTO
(0008,103E)	3	LO	Series Description	Description of the Series Possible Values: "Macular Cube 200x200", "Macular Cube 512x128", "5 Line Raster", "HD 5 Line Raster", "RASTER_SINGLE", "RASTER_21_LINES", "RASTER_GRID", "RASTER_RADIAL"	ALWAYS	AUTO
(0008,103F)	3	SQ	Series Description Code Sequence	A coded description of the Series. Sequence contains only 1 item which provides the scan pattern type information.	ALWAYS	AUTO
>(0008,0100)	1	SH	Code Value	Defined terms: MACULAR_CUBE RASTER RASTER_HD RASTER_SINGLE RASTER_21_LINES RASTER_GRID RASTER_RADIAL	ALWAYS	AUTO
>(0008,0102)	1	SH	Coding Scheme Designator	Always "99CZM"	ALWAYS	AUTO
>(0008,0103)	1C	SH	Coding	Always "20120401"	ALWAYS	AUTO

Copyright: © Carl Zeiss Meditec ,Inc.

			Scheme Version	for RASTER_HD, RASTER and MACULAR_CUBE Always "20141009" for "RASTER_SINGLE", RASTER_RADIAL, RASTER_GRID, RASTER_21_LINES		
>(0008,0104)	1	LO	Code Meaning	See Section 8.3. Defined terms: “Macular Cube Scan”, “Raster Scan”, "Raster HD Scan" "HD 1 Line 100x Scan", "HD 21 Line Scan", "HD Cross Scan", "HD Radial Scan". Value corresponds to the code value.	ALWAYS	AUTO
(0008,1070)	3	PN	Operators' Name	Name(s) of the operator(s) supporting the Series.	ALWAYS	AUTO
(0040,0275)	3	SQ	Request Attributes Sequence	Sequence that contains attributes from the Imaging Service Request. The sequence may have one or more Items. Contains zero or one item. This sequence is only included in Scheduled Case. In unscheduled case it will not be included.	ANAP	AUTO
>(0040,1001)	1C	SH	Requested Procedure ID	Identifier that identifies the Requested Procedure in the Imaging Service Request. Required if procedure was scheduled. May be present otherwise. Note: The condition is to allow the contents of this macro to be present (e.g., to convey the reason for the procedure, such as whether a mammogram is for screening or diagnostic purposes) even when the procedure was not formally scheduled and a value for this identifier is unknown, rather than making up a dummy value. Value as given by the Modality Worklist item that was accepted for this examination (scan and analysis).	VNAP	MWL
>(0008,0050)	3	SH	Accession Number	An identifier of the Imaging Service Request for this Requested Procedure.	VNAP	MWL
>(0020,000D)	3	UI	Study Instance UID	The unique identifier for the Study provided for this Requested Procedure.	ALWAYS	MWL
>(0032,1060)	3	LO	Requested Procedure Description	Institution-generated administrative description or classification of Requested Procedure. Value as given by the Modality Worklist item that was accepted for this examination (scan and analysis).	ANAP	MWL
(0040,0244)	3	DA	Performed Procedure Step Start Date	Date on which the Performed Procedure Step started. Date when this data was created.	ALWAYS	AUTO
(0040,0245)	3	TM	Performed Procedure Step Start Time	Time on which the Performed Procedure Step started. Time when this data was created.	ALWAYS	AUTO
(0040,0254)	3	LO	Performed	Possible Values:	ALWAYS	AUTO

Copyright: © Carl Zeiss Meditec ,Inc.

			Procedure Step Description	“Macular Cube 200x200”, “Macular Cube 512x128”, “5 Line Raster”, “HD 5 Line Raster”, “HD 1 Line 100X”, “HD 21 Line”, “HD Cross”, “HD Radial”		

Table 8-26 Ophthalmic Tomography IOD - Module "Ophthalmic Tomography Series"

Tag	Type	VR	Name	Description	PoV	Source
(0008,0060)	1	CS	Modality	Type of equipment that originally acquired the data used to create the images in this Series. Enumerated Values: OPT See section C.7.3.1.1.1 for further explanation.	ALWAYS	AUTO
(0020,0011)	1	IS	Series Number	A number that identifies this Series.	ALWAYS	AUTO

Table 8-27 Ophthalmic Tomography IOD - Module "Frame of Reference"

Tag	Type	VR	Name	Description	PoV	Source
(0020,0052)	1	UI	Frame of Reference UID	Uniquely identifies the frame of reference for a Series. See NEMA PS3.3 C.7.4.1.1.1 for further explanation.	ALWAYS	AUTO
(0020,1040)	2	LO	Position Reference Indicator	Part of the patient's anatomy used as a reference, such as the iliac crest, orbital-medial, sternal notch, symphysis pubis, xiphoid, lower coastal margin, external auditory meatus. See NEMA PS3.3 C.7.4.1.1.2 for further explanation.	ALWAYS	AUTO

Table 8-28 Ophthalmic Tomography IOD - Module "Synchronization"

Tag	Type	VR	Name	Description	PoV	Source
(0020,0200)	1	UI	Synchronization Frame of Reference UID	UID of common synchronization environment.	ALWAYS	AUTO
(0018,106A)	1	CS	Synchronization Trigger	Data acquisition synchronization with external equipment Enumerated Values: SOURCE - this equipment provides synchronization channel or trigger to other equipment EXTERNAL - this equipment receives synchronization channel or trigger from other equipment PASSTHRU - this equipment receives synchronization channel or trigger and forwards it NO TRIGGER - data acquisition not synchronized by common channel or trigger "NO TRIGGER" as no synchronization with other equipment is done.	ALWAYS	AUTO
(0018,1800)	1	CS	Acquisition Time Synchronized	Acquisition DateTime (0008,002A) synchronized with external time reference. Enumerated Values: Y, N See NEMA PS3.3 C.7.4.2.1.4 Always "N" as system time is not being synchronized with external time reference.	ALWAYS	AUTO

Copyright: © Carl Zeiss Meditec ,Inc.

Copyright: © Carl Zeiss Meditec ,Inc.

Table 8-29 Ophthalmic Tomography IOD - Module "General Equipement"

Tag	Type	VR	Name	Description	PoV	Source
(0008,0080)	3	LO	Institution Name	Institution where the equipment that produced the composite instances is located.	ALWAYS	CONFIG
(0008,1010)	3	SH	Station Name	User defined name identifying the machine that produced the composite instances. Value as configured in Equipment Edit dialog	ANAP	CONFIG

Table 8-30 Ophthalmic Tomography IOD - Module "Enhanced General Equipment"

Tag	Type	VR	Name	Description	PoV	Source
(0008,0070)	1	LO	Manufacturer	Manufacturer of the equipment that produced the composite instances. Always “Carl Zeiss Meditec”	ALWAYS	AUTO
(0008,1090)	1	LO	Manufacturer's Model Name	Manufacturer’s model name of the equipment that produced the composite instances. Value as configured in Institution Edit dialog. Always “CIRRUS HD-OCT 5000” or “CIRRUS HD-OCT 500”	ALWAYS	CONFIG
(0018,1000)	1	LO	Device Serial Number	Manufacturer’s serial number of the equipment that produced the composite instances. The serial number of the instrument in case of an Acquisition Modality. The model number plus license certificate number in case of a Review Station.	ALWAYS	AUTO
(0018,1020)	1	LO	Software Version(s)	Manufacturer’s designation of software version of the equipment that produced the composite instances. See Section C.7.5.1.1.3. Always <acquisition software version>\<generated software version> Where <generated software version> is “11.5.x.y”	ALWAYS	AUTO

Table 8-31 Ophthalmic Tomography IOD - Module "Image Pixel"

Tag	Type	VR	Name	Description	PoV	Source
(0028,0010)	1	US	Rows	Number of rows in the image.	ALWAYS	ACQUISITION
(0028,0011)	1	US	Columns	Number of columns in the image	ALWAYS	ACQUISITION
(0028,0100)	1	US	Bits Allocated	Number of bits allocated for each pixel sample. Each sample shall have the same number of bits allocated. See PS 3.5 for further explanation. Value is always 8	ALWAYS	AUTO
(0028,0101)	1	US	Bits Stored	Number of bits stored for each pixel sample. Each sample shall have the same number of bits stored. See PS 3.5 for further explanation. Value is always 8	ALWAYS	AUTO
(0028,0102)	1	US	High Bit	Most significant bit for pixel sample data. Each sample shall have the same high bit.	ALWAYS	AUTO

Copyright: © Carl Zeiss Meditec ,Inc.

				See PS 3.5 for further explanation. Value is always 7		
(7FE0,0010)	1C	OB|OW	Pixel Data	A data stream of the pixel samples that comprise the Image. See NEMA PS3.3 C.7.6.3.1.4 for further explanation. Required if Pixel Data Provider URL (0028,7FE0) is not present.	ALWAYS	ACQUISITION

Table 8-32 Ophthalmic Tomography IOD - Module "Multiframe Functional Groups"

Tag	Type	VR	Name	Description	PoV	Source
(5200,9229)	2	SQ	Shared Functional Groups Sequence	Sequence that contains the Functional Group Macros that are shared for all frames in this SOP Instance and Concatenation. Note: The contents of this sequence are the same in all SOP Instances that comprise a Concatenation. Zero or one Item may be included in this sequence. See section NEMA PS3.3 C.7.6.16.1.1 for further explanation.	ALWAYS	AUTO
>(0028,9110)	1	SQ	Pixel Measures Sequence	Identifies the physical characteristics of the pixels of this frame. Only a single Item shall be permitted in this sequence.	ALWAYS	AUTO
>>(0028,0030)	1C	DS	Pixel Spacing	Physical distance in the patient between the centers of each pixel, specified by a numeric pair - adjacent row spacing (delimiter) adjacent column spacing in mm. See NEMA PS3.3 10.7.1.3 for further explanation of the value order. Note: In the case of CT images with an Acquisition Type (0018,9302) of CONSTANT_ANGLE, the pixel spacing is that in a plane normal to the central ray of the diverging X-Ray beam as it passes through the data collection center. Required if Volumetric Properties (0008,9206) is other than DISTORTED or SAMPLED. May be present otherwise.	ALWAYS	ACQUISIT ION
>>(0018,0050)	1C	DS	Slice Thickness	Nominal reconstructed slice thickness, in mm. See NEMA PS3.3 C.7.6.2.1.1 and C.7.6.16.2.3.1 for further explanation. Required if Volumetric Properties (0008,9206) is VOLUME or SAMPLED. May be present otherwise.	ALWAYS	AUTO
>(0008,1140)	2	SQ	Referenced Image Sequence	The set of images or other composite SOP Instances used to plan the acquisition, if any, and other significant related images. See Section C.7.6.16.2.5.1 for further explanation. Zero or more Items may be included in this Sequence. The Referenced Image Sequence contains one item which describes the reference to an OP image. It may	ALWAYS	AUTO

Copyright: © Carl Zeiss Meditec ,Inc.

				contain more items if applicable.		
>>(0008,1150)	1	UI	Referenced SOP Class UID	Uniquely identifies the referenced SOP Class. “1.2.840.10008.5.1.4.1.1.77.1.5.1”as the referenced OP image.	ALWAYS	AUTO
>>(0008,1155)	1	UI	Referenced SOP Instance UID	Uniquely identifies the referenced SOP Instance. SOP Instance UID of the referenced OP instance..	ALWAYS	AUTO
>>(0040,A170)	1	SQ	Purpose of Reference Code Sequence	Describes the purpose for which the reference is made. Only a single Item shall be permitted in this sequence.	ALWAYS	AUTO
>>>(0008,0100)	1	SH	Code Value	"121311".	ALWAYS	AUTO
>>>(0008,0102)	1	SH	Coding Scheme Designator	"DCM".	ALWAYS	AUTO
>>>(0008,0104)	1	LO	Code Meaning	"Localizer".	ALWAYS	AUTO
>(0008,9124)	2	SQ	Derivation Image Sequence	The set of Images or other composite SOP Instances that were used to derive this frame. Zero or more Items may be included in this Sequence.	ALWAYS	AUTO
>>(0008,9215)	1	SQ	Derivation Code Sequence	A coded description of how this frame was derived. See NEMA PS3.3 C.7.6.1.1.3 for further explanation. One or more Items may be included in this Sequence. More than one Item indicates that successive derivation steps have been applied.	ALWAYS	AUTO
>>>(0008,0100)	1	SH	Code Value	"113091".	ALWAYS	AUTO
>>>(0008,0102)	1	SH	Coding Scheme Designator	"DCM".	ALWAYS	AUTO
>>>(0008,0104)	1	LO	Code Meaning	"Spatially-related frames extracted from the volume".	ALWAYS	AUTO
>>(0008,2112)	2	SQ	Source Image Sequence	The set of Images or other Composite SOP Instances that were used to derive this frame. Zero or more Items may be included in this Sequence. See NEMA PS3.3 C.7.6.1.1.4 for further explanation.	ALWAYS	AUTO
>>>(0008,1150)	1	UI	Referenced SOP Class UID	Uniquely identifies the referenced SOP Class. “1.2.840.10008.5.1.4.1.1.66” as we refer to a DICOM RAW instance.	ALWAYS	AUTO
>>>(0008,1155)	1	UI	Referenced SOP Instance UID	Uniquely identifies the referenced SOP Instance. SOP Instance UID of the RAW instance that this OPT was derived from.	ALWAYS	AUTO
>>>(0040,A170)	1	SQ	Purpose of	Describes the purpose for which the	ALWAYS	AUTO

Copyright: © Carl Zeiss Meditec ,Inc.

			Reference Code Sequence	reference is made, that is what role the source image or frame played in the derivation of this image or frame. Only a single Item shall be permitted in this sequence.		
>>>>(0008,0100)	1	SH	Code Value	"SRC_INSTANCE".	ALWAYS	AUTO
>>>>(0008,0102)	1	SH	Coding Scheme Designator	"99CZM"..	ALWAYS	AUTO
>>>>(0008,0103)	1C	SH	Coding Scheme Version	See Section 8.2. Required if the value of Coding Scheme Designator (0008,0102) is not sufficient to identify the Code Value (0008,0100) unambiguously. May be present otherwise. “20120401”	ALWAYS	AUTO
>>>>(0008,0104)	1	LO	Code Meaning	"Source instance used to create this instance".	ALWAYS	AUTO
>(0020,9071)	1	SQ	Frame Anatomy Sequence	Identifies anatomic characteristics of this frame. Only a single Item shall be permitted in this sequence.	ALWAYS	AUTO
>>(0020,9072)	1	CS	Frame Laterality	Laterality of (possibly paired) body parts (as described in Anatomic Region Sequence (0008,2218)) examined. Enumerated Values: R = right L = left U = unpaired B = both left and right Note: This Attribute is mandatory, in order to ensure that frames may be positioned correctly relative to one another for display. Shall be consistent with any laterality information contained in Primary Anatomic Structure Modifier Sequence (0008,2230), if present.	ALWAYS	AUTO
>>(0008,2218)	1	SQ	Anatomic Region Sequence	Sequence that identifies the anatomic region of interest in this Instance (i.e. external anatomy, surface anatomy, or general region of the body). Only a single Item shall be permitted in this sequence.	ALWAYS	AUTO
>>>(0008,0100)	1	SH	Code Value	T-AA610 for Retina, T-AA200 for Cornea, T-AA50 for Anterior chamber of eye	ALWAYS	AUTO
>>>(0008,0102)	1	SH	Coding Scheme Designator	"SRT"	ALWAYS	AUTO
>>>(0008,0104)	1	LO	Code Meaning	“Retina” for Retina, “Cornea” for Cornea, “Anterior chamber of the eye” for anterior chamber	ALWAYS	AUTO
(5200,9230)	1	SQ	Per-frame Functional Groups Sequence	Sequence that contains the Functional Group Macros corresponding to each frame of the Multi-frame Image. The first Item corresponds with the first frame, and so on. Each Item shall contain the same set of Functional Group Macros.	ALWAYS	AUTO

Copyright: © Carl Zeiss Meditec ,Inc.

				This Sequence shall contain the same number of Items as the number of frames in the Multi-frame image. See NEMA PS3.3 Section C.7.6.16.1.2 for further explanation.		
>(0020,9111)	1	SQ	Frame Content Sequence	Identifies general characteristics of this frame. Only a single Item shall be permitted in this sequence.	ALWAYS	AUTO
>>(0018,9151)	1C	DT	Frame Reference Datetime	The point in time that is most representative of when data was acquired for this frame. See NEMA PS3.3 C.7.6.16.2.2.1 and C.7.6.16.2.2.2 for further explanation. Note: The synchronization of this time with an external clock is specified in the synchronization Module in Acquisition Time synchronized (0018,1800). Required if Frame Type (0008,9007) Value 1 of this frame is ORIGINAL. May be present otherwise. The point in time that is most representative of when data was acquired for this frame.	ALWAYS	AUTO
>>(0018,9074)	1C	DT	Frame Acquisition Datetime	The date and time that the acquisition of data that resulted in this frame started. See NEMA PS3.3 C.7.6.16.2.2.1 for further explanation. Required if Frame Type (0008,9007) Value 1 of this frame is ORIGINAL. May be present otherwise. The date and time that the acquisition of data that resulted in this frame started.	ALWAYS	AUTO
>>(0020,9157)	1C	UL	Dimension Index Values	Contains the values of the indices defined in the Dimension Index Sequence (0020,9222) for this multi-frame header frame. The number of values is equal to the number of Items of the Dimension Index Sequence and shall be applied in the same order. See section NEMA PS3.3 C.7.6.17.1 for a description. Required if the value of the Dimension Index Sequence (0020,9222) exists. Contains the values of the indices defined in the Dimension Index Sequence '(0020,9222) for this multi-frame header frame. The number of values is equal to the number of Items of the Dimension Index Sequence and shall be applied in the same order. For Instance: Frame 1 has Dimension Index Value 1/1 Frame 2 has Dimension Index Value 1/2 Frame 3 has Dimension Index Value 1/3 .. and so on.	ALWAYS	AUTO
>>(0020,9056)	1C	SH	Stack ID	Identification of a group of frames, with different positions and/or orientations that belong together, within a dimension	ALWAYS	AUTO

Copyright: © Carl Zeiss Meditec ,Inc.

				organization. See NEMA PS3.3 C.7.6.16.2.2.4 for further explanation. Required if the value of SOP Class UID (0008,0016) equals "1.2.840.10008.5.1.4.1.1.130". May be present otherwise. See NEMA PS3.3 C.7.6.16.2.2.7. Identification of a group of frames, with different positions and/or orientations that belong together, within a dimension organization.		
>>(0020,9057)	1C	UL	In-Stack Position Number	The ordinal number of a frame in a group of frames, with the same Stack ID Required if Stack ID (0020,9056) is present. See section C.7.6.16.2.2.4 for further explanation. The ordinal number of a frame in a group of frames, with the same Stack ID Required if Stack ID '(0020,9056) is present.	ALWAYS	AUTO
>(0022,0031)	1	SQ	Ophthalmic Frame Location Sequence	Specifies the column locations for this frame in terms of locations on a referenced image. One or more items shall be present. As we reference a OP Image 8 Bit the SOP Class is "1.2.840.10008.5.1.4.1.1.77.1.5.1"	ALWAYS	AUTO
>>(0008,1150)	1	UI	Referenced SOP Class UID	Uniquely identifies the referenced SOP Class. SOP Instance UID of the OP Image that this OPT instance is referencing to.	ALWAYS	AUTO
>>(0008,1155)	1	UI	Referenced SOP Instance UID	Uniquely identifies the referenced SOP Instance.	ALWAYS	AUTO
>>(0022,0032)	1	FL	Reference Coordinates	Image coordinates for the points on the referenced image that correspond to the points on this frame. See section NEMA PS3.3 C.8.17.10.1.1. It contains the coordinates in the referenced OP image.The linear scan line shall be described by giving the endpoint of the scan line. The Reference Coordinates (0022,0032) would contain values that give the row and column coordinates for the image pixel on the referenced image that corresponds to the first column of the OPT Frame 1 and the row and column coordinates that corresponds to the last column of the OPT Frame 1.	ALWAYS	AUTO
>>(0022,0039)	1	CS	Ophthalmic Image Orientation	Enumerated Values: LINEAR NONLINEAR TRANSVERSE "LINEAR	ALWAYS	AUTO
(0020,0013)	1	IS	Instance Number	A number that identifies this instance. The value shall be the same for all SOP Instances of a Concatenation, and different for each separate	ALWAYS	AUTO

Copyright: © Carl Zeiss Meditec ,Inc.

				Concatenation and for each SOP Instance not within a Concatenation in a series. As we do not use concatenation of instances. The Instance Number is be 1.		
(0008,0023)	1	DA	Content Date	The date the data creation was started. Note: For instance, this is the date the pixel data is created, not the date the data is acquired. Date when the OPT pixel data was created.	ALWAYS	AUTO
(0008,0033)	1	TM	Content Time	The time the data creation was started. Note: For instance, this is the time the pixel data is created, not the time the data is acquired. Time when the OPT pixel data was created.	ALWAYS	AUTO
(0028,0008)	1	IS	Number of Frames	Number of frames in a multi-frame image. See NEMA PS3.3 C.7.6.6.1.1 for further explanation. Equal to number of frames in this OPT instance.	ALWAYS	ACQUISITION
(0028,6010)	3	US	Representative Frame Number	The frame number selected for use as a pictorial representation (e.g. icon) of the multi-frame Image.	ALWAYS	AUTO
(0020,9161)	1C	UI	Concatenation UID	Identifier of all SOP Instances that belong to the same concatenation. Required if a group of multi-frame image SOP Instances within a Series are part of a Concatenation.	ALWAYS	AUTO

Table 8-33 Ophthalmic Tomography IOD - Module "Multiframe Dimension"

Tag	Type	VR	Name	Description	PoV	Source
(0020,9221)	1	SQ	Dimension Organization Sequence	Sequence that lists the Dimension Organization UIDs referenced by the containing SOP Instance. See section NEMA PS3.3 C.7.6.17.2 for further explanation. One or more Items may be included in this Sequence. Sequence contains information about dimensions that are being used to determine the order of the OPT frames.	ALWAYS	AUTO
>(0020,9164)	1	UI	Dimension Organization UID	Uniquely identifies a set of dimensions referenced within the containing SOP Instance. See NEMA PS3.3 Section C.7.6.17.2 for further explanation. 1.2.276.0.75.2.2.42.2012082222624	ALWAYS	AUTO
(0020,9222)	1	SQ	Dimension Index Sequence	Identifies the sequence containing the indices used to specify the dimension of the multi-frame object. One or more Items may be included in this sequence.	ALWAYS	AUTO
>(0020,9165)	1	AT	Dimension Index Pointer	Contains the Data Element Tag that is used to identify the Attribute connected with the index. See NEMA PS3.3 Section C.7.6.17.1 for further	ALWAYS	AUTO

Copyright: © Carl Zeiss Meditec ,Inc.

				explanation. (0020,9056) as the first attribute used as an index is Stack ID whose tag is identified by (0020,9056).		
>(0020,9167)	1C	AT	Functional Group Pointer	Contains the Data Element Tag of the Functional Group Sequence that contains the Attribute that is referenced by the Dimension Index Pointer (0020,9165). See section C.7.6.17.1 for further explanation. Required if the value of the Dimension Index Pointer (0020,9165) is the Data Element Tag of an Attribute that is contained within a Functional Group Sequence. (0020, 9111) as the first attribute used as an index is in the Frame Content Sequence Macro.	ALWAYS	AUTO
>(0020,9164)	1C	UI	Dimension Organization UID	Uniquely identifies a set of dimensions referenced within the containing SOP Instance. In particular the dimension described by this sequence item is associated with this Dimension Organization UID. See section C.7.6.17.2 for further explanation. Required if the value of the Dimension Organization Sequence (0020,9221) contains Items Identical to the Dimension Organization UID which is included in the Dimension Organization Sequence (0020,9221) above.	ALWAYS	AUTO

Table 8-34 Ophthalmic Tomography IOD - Module "Acquisition Context"

Tag	Type	VR	Name	Description	PoV	Source
(0040,0555)	2	SQ	Acquisition Context Sequence	A sequence of Items that describes the conditions present during the acquisition of the data of the SOP Instance. Zero or more items may be included in this sequence. This sequence is used to convey the Image Presentation Aspect Ratio. The aspect ratio shall be used by the displaying station for image presentation	ALWAYS	AUTO
>(0040,A040)	3	CS	Value Type	The type of the value encoded in this Item. Defined Terms: TEXT NUMERIC CODE DATE TIME PNAME See Section 10.2. The type of the value encoded in this Item. Defined Terms: TEXT NUMERIC CODE DATE TIME PNAME “NUMERIC”	ALWAYS	AUTO
>(0040,A043)	1	SQ	Concept Name Code Sequence	A concept that constrains the meaning of (i.e. defines the role of) the Observation Value. The "Name" component of a Name/Value pair. This sequence shall contain exactly one item.	ALWAYS	AUTO
>>(0008,0100)	1	SH	Code Value	“IPAR”	ALWAYS	AUTO
>>(0008,0102)	1	SH	Coding Scheme Designator	“99CZM”	ALWAYS	AUTO
>>(0008,0103)	1C	SH	Coding Scheme Version	See Section 8.2. Required if the value of Coding Scheme Designator (0008,0102) is not sufficient to identify the Code Value (0008,0100) unambiguously. May be present otherwise. ”20120401”..	ALWAYS	AUTO

Copyright: © Carl Zeiss Meditec ,Inc.

>>(0008,0104)	1	LO	Code Meaning	"Image Presentation Aspect Ratio width and height"	ALWAYS	AUTO
>(0040,A30A)	1C	DS	Numeric Value	This is the Value component of a Name/Value pair when the Concept implied by Concept Name Code Sequence (0040,A043) is a set of one or more numeric values. Required if the value that Concept Name Code Sequence (0040,A043) requires (implies) is a set of one or more integers or real numbers. Shall not be present otherwise. Note that this attribute has a value multiplicity of 1:n. Values are separated by a backslash, e.g. "1\2"	ALWAYS	AUTO
>(0040,08EA)	1C	SQ	Measurement Units Code Sequence	Units of measurement. Only a single Item shall be permitted in this Sequence. Required if Numeric Value (0040,A30A) is sent. Shall not be present otherwise.	ALWAYS	AUTO
>>(0008,0100)	1	SH	Code Value	"{ratio}"	ALWAYS	AUTO
>>(0008,0102)	1	SH	Coding Scheme Designator	"UCUM"	ALWAYS	AUTO
>>(0008,0104)	1	LO	Code Meaning	"ratio"	ALWAYS	AUTO

Table 8-35 Ophthalmic Tomography IOD - Module "Ophthalmic Tomography Image"

Tag	Type	VR	Name	Description	PoV	Source
(0008,0008)	1	CS	Image Type	Image identification characteristics. See NEMA PS3.3 C.7.6.1.1.2 for Enumerated Values and Defined Terms and further explanation. Image identification characteristics. Multi-Valued element: 1st "ORIGINAL" 2nd "PRIMARY" 3rd "" (empty) 4th Scan Type, with one of the following values: "MAC CUBE 512X128", "MAC CUBE 200X200", "5 LINE RASTER" and "HD 5 LINE RASTER", "HD 1 Line 100X", "HD 21 LINE", "HD CROSS", "HD RADIAL"	ALWAYS	AUTO
(0028,0002)	1	US	Samples per Pixel	Number of samples (planes) in this image. See NEMA PS3.3 C.7.6.3.1.1 for further explanation. Always "1".	ALWAYS	AUTO
(0008,002A)	1	DT	Acquisition Datetime	The date and time that the acquisition of data started. Note: The synchronization of this time with an external clock is specified in the synchronization Module in Acquisition Time synchronized (0018,1800) . Date and time when the acquisition of the data started.	ALWAYS	AUTO
(0020,0012)	1	IS	Acquisition Number	A number identifying the single continuous gathering of data over a period of time which	ALWAYS	AUTO

Copyright: © Carl Zeiss Meditec ,Inc.

				resulted in this image. Numeric (1, 2, 3,). Count up beginning at number 1.		
(0028,0004)	1	CS	Photometric Interpretation	Specifies the intended interpretation of the pixel data. Always “MONOCHROME2”	ALWAYS	AUTO
(0028,0103)	1	US	Pixel Representation	Data representation of the pixel samples. Each sample shall have the same pixel representation. Enumerated Values: 0000 = unsigned integer. 0001 = 2's complement Always “0”.	ALWAYS	AUTO
(0028,0100)	1	US	Bits Allocated	Number of bits allocated for each pixel sample. Each sample shall have the same number of bits allocated. Bits Allocated (0028,0100) shall be 8 or 16 Always “8”	ALWAYS	AUTO
(0028,0101)	1	US	Bits Stored	Number of bits stored for each pixel sample. Each sample shall have the same number of bits stored. Bits Stored (0028,0101) shall be 8, 12 or 16 Always “8”	ALWAYS	AUTO
(0028,0102)	1	US	High Bit	Most significant bit for pixel sample data. Each sample shall have the same high bit. High Bit (0028,0102) shall be one less than Bits Stored Always “7”	ALWAYS	AUTO
(2050,0020)	1	CS	Presentation LUT Shape	Specifies an identity transformation for the Presentation LUT, such that the output of all grayscale transformations defined in the IOD containing this Module are defined to be P-Values. Enumerated Values: IDENTITY - output is in P-Values. Always “IDENTITY”	ALWAYS	AUTO
(0028,2110)	1	CS	Lossy Image Compression	Specifies whether an Image has undergone lossy compression (at a point in its lifetime). Enumerated Values: 00 = Image has NOT been subjected to lossy compression. 01 = Image has been subjected to lossy compression. Once this tag has been set to 01 it shall not be reset. If this tag is empty, no information is explicitly available. See NEMA PS3.3 C.7.6.1.1.5 Always “01”	ALWAYS	AUTO
(0028,2112)	1C	DS	Lossy Image Compression Ratio	Describes the approximate lossy compression ratio(s) that have been applied to this image. Required when compression has been applied. See NEMA PS3.3 C.7.6.1.1.5 for further explanation. May be multivalued if successive lossy compression steps have been applied. Notes: 1. For example, a compression ratio of 30:1 would be described in this Attribute with a single value of 30. 2. For historical reasons, the lossy compression ratio should also be described in Derivation Description (0008,2111). Value range; 0.0F-10.0F. 0: means no compression 1: means lossless	ALWAYS	AUTO

Copyright: © Carl Zeiss Meditec ,Inc.

				>1 means lossy with compressed ratio Always “2”		
(0028,2114)	1C	CS	Lossy Image Compression Method	A label for the lossy compression method(s) that have been applied to this image. See NEMA PS3.3 C.7.6.1.1.5 for further explanation. May be multi-valued if successive lossy compression steps have been applied; the value order shall correspond to the values of Lossy Image Compression Ratio (0028,2112). Required if Lossy Image Compression (0028,2110) has a value of "01". Note: For historical reasons, the lossy compression method should also be described in Derivation Description (0008,2111). “ISO_15444_1”	ALWAYS	AUTO
(0028,0301)	1	CS	Burned In Annotation	Indicates whether or not image contains sufficient burned in annotation to identify the patient and date the image was acquired. “NO”	ALWAYS	AUTO
(0020,9228)	1	UL	Concatenation Frame Offset Number	Offset of the first frame in a multi-frame image of a concatenation. Always “0”.	ALWAYS	AUTO
(0020,9162)	1	US	In-concatenation Number	Identifier for one SOP Instance belonging to a concatenation. Always “1”.	ALWAYS	AUTO
(0020,9163)	1	US	In-concatenation Total Number	The number of SOP Instances sharing the same Concatenation UID (0020,9161). Always “1”.	ALWAYS	AUTO

Table 8-36 Ophthalmic Tomography IOD - Module "Opthalmic Tomography Acquisition Parameters"

Tag	Type	VR	Name	Description	PoV	Source
(0022,0030)	2	FL	Axial Length of the Eye	Axial length of the eye in mm. Exists for conformance, but empty.	EMPTY	AUTO
(0022,000C)	2	FL	Horizontal Field of View	The horizontal field of view in degrees. Exists for conformance, but empty.	EMPTY	AUTO
(0022,001B)	2	SQ	Refractive State Sequence	The refractive state of the imaged eye at the time of acquisition. Zero or one Item shall be present. Zero length means the refractive state was not measured. Exists for conformance, but empty.	EMPTY	AUTO
(0022,000A)	2	FL	Emmetropic Magnification	Emmetropic magnification value (dimensionless). Zero length means the emmetropic magnification was not measured. Exists for conformance, but empty.	EMPTY	AUTO
(0022,000B)	2	FL	Intra Ocular Pressure	Value of intraocular pressure in mmHg. Zero length means the pressure was not measured	EMPTY	AUTO

Copyright: © Carl Zeiss Meditec ,Inc.

				Exists for conformance, but empty.		
(0022,000D)	2	CS	Pupil Dilated	Enumerated Values: YES NO If this tag is empty, no information is available. Exists for conformance, but empty.	EMPTY	AUTO

Table 8-37 Ophthalmic Tomography IOD - Module "Ophthalmic Tomography Parameters"

Tag	Type	VR	Name	Description	PoV	Source
(0022,0015)	1	SQ	Acquisition Device Type Code Sequence	Describes the type of acquisition device. A single item shall be present in the sequence.	ALWAYS	AUTO
>(0008,0100)	1	SH	Code Value	“A-00FBE”	ALWAYS	AUTO
>(0008,0102)	1	SH	Coding Scheme Designator	“SRT”	ALWAYS	AUTO
>(0008,0104)	1	LO	Code Meaning	“Optical Coherence Tomography Scanner”	ALWAYS	AUTO
(0022,0017)	2	SQ	Light Path Filter Type Stack Code Sequence	Filters used in the light source path. Zero or more items may be present in the sequence. “SRT”, “A-010DC”, “Infrared optical filter”	ALWAYS	AUTO
>(0008,0100)	1	SH	Code Value	“A-010DC”	ALWAYS	AUTO
>(0008,0102)	1	SH	Coding Scheme Designator	“SRT”	ALWAYS	AUTO
>(0008,0104)	1	LO	Code Meaning	“Infrared optical filter”	ALWAYS	AUTO
(0018,7004)	1	CS	Detector Type	Type of detector used for creating this image. Defined terms: CCD = Charge Coupled Device CMOS = Complementary Metal Oxide Semiconductor PHOTO = Photodetector INT = Interferometer “CCD”	ALWAYS	AUTO
(0022,0055)	1C	FL	Illumination Wave Length	Wavelength of the illuminator in nm. Required if Acquisition Device Type Code Sequence (0022,0015) contains an item with the value (A-00FBE, SRT, "Optical Coherence Tomography Scanner"). May be present otherwise. “840”	ALWAYS	AUTO
(0022,0056)	1C	FL	Illumination Power	Power of the illuminator in microwatts at corneal plane. Required if Acquisition Device Type Code Sequence (0022,0015) contains an item with the value (SRT, A-00FBE,"Optical Coherence Tomography Scanner"). May be present otherwise. “600”	ALWAYS	AUTO

Copyright: © Carl Zeiss Meditec ,Inc.

(0022,0057)	1C	FL	Illumination Bandwidth	Bandwidth of the illuminator in nm. Required if Acquisition Device Type Code Sequence (0022,0015) contains an item with the value (A-00FBE, SRT, "Optical Coherence Tomography Scanner"). May be present otherwise. “32”	ALWAYS	AUTO
(0022,0035)	1C	FL	Depth Spatial Resolution	The inherent limiting resolution in microns for depth of the acquisition equipment for high contrast objects for the data gathering and reconstruction technique chosen. If variable, the value at the center of the scanning volume. Required if Acquisition Device Type Code Sequence (0022,0015) contains an item with the value (A-00FBE, SRT, "Optical Coherence Tomography Scanner"). May be present otherwise. “5”	ALWAYS	AUTO
(0022,0036)	1C	FL	Maximum Depth Distortion	Maximum distortion in depth direction in % of Depth Spatial Resolution. Required if Acquisition Device Type Code Sequence (0022,0015) contains an item with the value (SRT, A-00FBE,"Optical Coherence Tomography Scanner"). May be present otherwise. “0”	ALWAYS	AUTO
(0022,0037)	1C	FL	Along-scan Spatial Resolution	The inherent limiting resolution in microns of the acquisition equipment in the direction of a row. Required if Acquisition Device Type Code Sequence (0022,0015) contains an item with the value (A-00FBE, SRT, "Optical Coherence Tomography Scanner"). May be present otherwise. “20”	ALWAYS	AUTO
(0022,0038)	1C	FL	Maximum Along-scan Distortion	Maximum distortion in along-scan direction in % of Along-scan Spatial Resolution. Required if Acquisition Device Type Code Sequence (0022,0015) contains an item with the value (A-00FBE, SRT, "Optical Coherence Tomography Scanner"). May be present otherwise. “0”	ALWAYS	AUTO
(0022,0048)	1C	FL	Across-scan Spatial Resolution	The inherent limiting resolution in microns of the acquisition equipment perpendicular to the slice. Required if Acquisition Device Type Code Sequence (0022,0015) contains an item with the value (A-00FBE, SRT, "Optical Coherence Tomography Scanner"). May be present otherwise. “20”	ALWAYS	AUTO
(0022,0049)	1C	FL	Maximum Across-scan Distortion	Maximum distortion in across-scan direction in % of cross-scan Spatial Resolution. Required if Acquisition Device Type Code Sequence (0022,0015) contains an item with the value (A-00FBE, SRT, "Optical Coherence Tomography Scanner"). May be present otherwise.	ALWAYS	AUTO

Copyright: © Carl Zeiss Meditec ,Inc.

				“0”		

Table 8-38 Ophthalmic Tomography IOD - Module "Ocular Region Imaged"

Tag	Type	VR	Name	Description	PoV	Source
(0020,0062)	1	CS	Image Laterality	Laterality of object imaged (as described in Anatomic Region Sequence (0008,2218)) examined. Enumerated Values: R = right eye L = left eye B = both left and right eye Shall be consistent with any laterality information contained in Primary Anatomic Structure Modifier Sequence (0008,2230), if present. Note: Laterality (0020,0060) is a Series level Attribute and must be the same for all Images in the Series. Since most Ophthalmic Photographic Image studies contain images of both eyes, the series level attribute will rarely be present.	ALWAYS	AUTO
(0008,2218)	1	SQ	Anatomic Region Sequence	Sequence that identifies the anatomic region of interest in this Instance (i.e. external anatomy, surface anatomy, or general region of the body). Only a single Item shall be permitted in this sequence.	ALWAYS	AUTO
>(0008,0100)	1	SH	Code Value	T-AA610 for Retina, T-AA200 for Cornea, T-AA50 for Anterior chamber of eye	ALWAYS	AUTO
>(0008,0102)	1	SH	Coding Scheme Designator	Value shall be “SRT”	ALWAYS	AUTO
>(0008,0104)	1	LO	Code Meaning	"Retina" for Retina, “Cornea” for Cornea, “Anterior chamber of the eye” for anterior chamber.	ALWAYS	AUTO

Table 8-39 Ophthalmic Tomography IOD - Module "SOP Common"

Tag	Type	VR	Name	Description	PoV	Source
(0008,0016)	1	UI	SOP Class UID	Uniquely identifies the SOP Class. See NEMA PS3.3 C.12.1.1.1 for further explanation. See also PS 3.4. Always “1.2.840.10008.5.1.4.1.1.77.1.5.4”	ALWAYS	AUTO
(0008,0018)	1	UI	SOP Instance UID	Uniquely identifies the SOP Instance. See NEMA PS3.3 C.12.1.1.1 for further explanation. See also NEMA PS 3.4. UIDs“1.2.276.0.75.2.2.42” or “1.2.276.0.75.2.2.43” extended by machine identifier and time information and *.2	ALWAYS	AUTO
(0008,0005)	1C	CS	Specific Character Set	Character Set that expands or replaces the Basic Graphic Set. Required if an expanded or replacement character set is used. See NEMA PS3.3 C.12.1.1.2 for Defined Terms. Always “ISO_IR 192” for UTF-8 encoded Unicode.	ALWAYS	AUTO
(0008,0012)	3	DA	Instance Creation	Date the SOP Instance was created.	ALWAYS	AUTO

Copyright: © Carl Zeiss Meditec ,Inc.

			Date			
(0008,0013)	3	TM	Instance Creation Time	Time the SOP Instance was created.	ALWAYS	AUTO

Copyright: © Carl Zeiss Meditec ,Inc.

Copyright: © Carl Zeiss Meditec ,Inc.

8.1.1.4 Raw Data Information Object Definition

IE	Module	Usage
Patient		
	Patient	ALWAYS
	Clinical Trial Subject	NEVER
Study		
	General Study	ALWAYS
	Patient Study	NEVER
	Clinical Trial Study	NEVER
Series		
	General Series	ALWAYS
	Clinical Trial Series	NEVER
Frame Of Reference		
	Frame Of Reference	NEVER for Raw Data Analysis ALWAYS for Raw Data Acquisition
	Synchronization	NEVER for Raw Data Analysis ALWAYS for Raw Data Acquisition
Equipment		
	General Equipment	ALWAYS
Raw Data		
	Acquisition Context	ALWAYS
	Specimen	NEVER

Copyright: © Carl Zeiss Meditec, Inc.

	Raw Data	ALWAYS
	Sop Common	ALWAYS

Table 8-40 Raw Data IOD - Module "Patient"

Tag	Type	VR	Name	Description	PoV	Source
(0010,0010)	2	PN	Patient's Name	Patient's full name.	ALWAYS	MWL, USER, SRQ
(0010,0020)	2	LO	Patient ID	Primary hospital identification number or code for the patient.	ALWAYS	MWL, USER, SRQ
(0010,0021)	3	LO	Issuer of Patient ID	Identifier of the Assigning Authority (system, organization, agency, or department) that issued the Patient ID. Note: Equivalent to HL7 v2 CX component 4 subcomponent 1.	ANAP	MWL, SRQ
(0010,0030)	2	DA	Patient's Birth Date	Birth date of the patient.	ALWAYS	MWL, USER, SRQ
(0010,0040)	2	CS	Patient's Sex	Sex of the named patient. Enumerated Values: M = male F = female O = other	VNAP	MWL, USER, SRQ

Table 8-41 Raw Data IOD - Module "General Study "

Tag	Type	VR	Name	Description	PoV	Source
(0020,000D)	1	UI	Study Instance UID	Unique identifier for the Study. Uses value as given by the Modality Worklist service in scheduled case. The software creates the UID in the unscheduled case. Then it uses “1.2.276.0.75.2.2.42.” as constant prefix for generated UIDs for CIRRUS HD-OCT Model 5000. “1.2.276.0.75.2.2.43.” as constant prefix for generated UIDs for CIRRUS HD-OCT Model 500. For analysis, uses value as given by the source Raw Data when it is originated from other devices.	ALWAYS	MWL, AUTO
(0008,0020)	2	DA	Study Date	Date the Study started.	ALWAYS	AUTO

Copyright: © Carl Zeiss Meditec, Inc.

(0008,0030)	2	TM	Study Time	Time the Study started.	ALWAYS	AUTO
(0008,0090)	2	PN	Referring Physician's Name	Name of the patient's referring physician Attribute exists but contains no value in unscheduled case.	VNAP	MWL
(0008,0050)	2	SH	Accession Number	A RIS generated number that identifies the order for the Study. Value does not exist in unscheduled case.	VNAP	MWL
(0008,1032)	3	SQ	Procedure Code Sequence	A Sequence that conveys the type of procedure performed. One or more Items may be included in this Sequence.		
>(0008,0100)	1	SH	Code Value	Set to “SD-E1”		
>(0008,0102)	1	SH	Coding Scheme Designator	Set to “99CZM”		
>(0008,0103)	1C	SH	Coding Scheme Version	Set to “1.0”		
>(0008,0104)	1	LO	Code Meaning	Set to “ALL SCANS”		

Table 8-42 Raw Data IOD - Module "General Series”

Tag	Type	VR	Name	Description	PoV	Source
(0008,0060)	1	CS	Modality	Type of equipment that originally acquired the data used to create the images in this Series. See NEMA PS3.3 C.7.3.1.1.1 for Defined Terms.	ALWAYS	AUTO
(0020,000E)	1	UI	Series Instance UID	Unique identifier of the Series. “1.2.276.0.75.2.2.42” or “1.2.276.0.75.2.2.43” extended by machine identifier and time information.	ALWAYS	AUTO
(0020,0011)	2	IS	Series Number	A number that identifies this Series.	ALWAYS	AUTO
(0020,0060)	2C	CS	Laterality	Laterality of (paired) body part examined. Required if the body part examined is a paired structure	ALWAYS	AUTO

Copyright: © Carl Zeiss Meditec, Inc.

				and Image Laterality (0020,0062) or Frame Laterality (0020,9072) are not sent. Enumerated Values: R = right L = left Note: Some IODs support Image Laterality (0020,0062) at the Image level or Frame Laterality(0020,9072) at the Frame level in the Frame Anatomy functional group macro, which can provide a more comprehensive mechanism for specifying the laterality of the body part(s) being examined.		
(0008,0021)	3	DA	Series Date	Date the Series started.	ALWAYS	AUTO
(0008,0031)	3	TM	Series Time	Time the Series started.	ALWAYS	AUTO
(0008,103E)	3	LO	Series Description	For acquisition objects generated by Cirrus SW versions 11.5 one of the following values will be set: Anterior Segment Cube 512x128 Anterior Segment 5 Line Raster RASTER_SINGLE RASTER_21_LINES HD 5 Line Raster RASTER_GRID RASTER_RADIAL Anterior Chamber HD Angle HD Cornea Pachymetry Wide Angle to Angle Macular Cube 200x200 Macular Cube 512x128 Optic Disc Cube 200x200 5 Line Raster Angiography 3x3 mm Angiography 6x6 mm Angiography 8x8 mm ONH Angiography 4.5x4.5 mm Angiography 8x8 mm Constituent Angiography 6x6 mm Constituent For Analysis RawData IOD, please refer to the Protocol Code Meaning in Table 8-53 Analysis Protocols For objects from legacy versions other values may be present or the field may be empty.	ALWAYS	AUTO

Copyright: © Carl Zeiss Meditec, Inc.

(0040,0275)	3	SQ	Request Attributes Sequence	Sequence that contains attributes from the Imaging Service Request. The sequence may have one or more Items. The Request Attributes Sequence is only included in Scheduled Case. In unscheduled case it will not be included.	ANAP	AUTO
>(0040,1001)	1C	SH	Requested Procedure ID	Identifier that identifies the Requested Procedure in the Imaging Service Request. Required if procedure was scheduled. May be present otherwise. Note: The condition is to allow the contents of this macro to be present (e.g., to convey the reason for the procedure, such as whether a mammogram is for screening or diagnostic purposes) even when the procedure was not formally scheduled and a value for this identifier is unknown, rather than making up a dummy value.	VNAP	MWL
>(0008,0050)	3	SH	Accession Number	An identifier of the Imaging Service Request for this Requested Procedure.	VNAP	MWL
>(0020,000D)	3	UI	Study Instance UID	The unique identifier for the Study provided for this Requested Procedure.	ALWAYS	MWL
>(0032,1060)	3	LO	Requested Procedure Description	Institution-generated administrative description or classification of Requested Procedure. Value as given by the Modality Worklist item that was accepted for this examination (scan and analysis).	ANAP	MWL
(0040,0244)	3	DA	Performed Procedure Step Start Date	Date on which the Performed Procedure Step started.	ALWAYS	AUTO
(0040,0245)	3	TM	Performed Procedure Step Start Time	Time on which the Performed Procedure Step started.	ALWAYS	AUTO
(0040,0254)	3	LO	Performed Procedure Step Description	For Raw Data acquisition objects generated by Cirrus SW versions 11.0 one of the following values will be set: Anterior Segment Cube 512x128 Anterior Segment 5 Line Raster HD 1 Line 100x HD 21 Line HD 5 Line Raster HD Cross HD Radial Anterior Chamber HD Angle HD Cornea Pachymetry Wide Angle to Angle Macular Cube 200x200 Macular Cube 512x128	ANAP	AUTO

Copyright: © Carl Zeiss Meditec, Inc.

				Optic Disc Cube 200x200 5 Line Raster Angiography 3x3 mm Angiography 6x6 mm Angiography 8x8 mm ONH Angiography 4.5x4.5 mm Angiography 8x8 mm Constituent Angiography 6x6 mm Constituent For objects from legacy versions other values may be present or the field may be empty.		
(0040,0260)	3	SQ	Performed Protocol Code Sequence	Sequence describing the Protocol performed for this Procedure Step. One or more Items may be included in this Sequence.	ALWAYS	AUTO
>(0008,0100)	1	SH	Code Value	Please see Table 8-52 Acquisition Scan Protocols and Table 8-53 Analysis Protocols.	ALWAYS	AUTO
>(0008,0102)	1	SH	Coding Scheme Designator	Set to “99CZM”	ALWAYS	AUTO
>(0008,0103)	1C	SH	Coding Scheme Version	Set to “1.0”	ALWAYS	AUTO
>(0008,0104)	1	LO	Code Meaning	Please see Table 8-52 Acquisition Scan Protocols and Table 8-53 Analysis Protocols.	ALWAYS	AUTO

Copyright: © Carl Zeiss Meditec, Inc.

Table 8-43 Raw Data IOD – Module "Frame Of Reference"

Tag	Type	VR	Name	Description (see 8.1.1.4 Raw Data Information Object Definition - Usage Details)	PoV	Source
(0020,0052)	1	UI	Frame of Reference UID	Uniquely identifies the frame of reference for a Series. See C.7.4.1.1.1 for further explanation.	ALWAYS	AUTO
(0020,1040)	2	LO	Position Reference Indicator	Part of the patient's anatomy used as a reference, such as the iliac crest, orbital-medial, sternal notch, symphysis pubis, xiphoid, lower coastal margin, external auditory meatus. See C.7.4.1.1.2 for further explanation. This field is not available for RAW analysis data.	ALWAYS	AUTO

Table 8-44 Raw Data IOD – Module "Synchronization"

Tag	Type	VR	Name	Description (see 8.1.1.4 Raw Data Information Object Definition - Usage Details)	PoV	Source
(0020,0200)	1	UI	Synchronization Frame of Reference UID	UID of common synchronization environment. See C.7.4.2.1.1.	ALWAYS	AUTO
(0018,106A)	1	CS	Synchronization Trigger	Data acquisition synchronization with external equipment Enumerated Values: SOURCE - this equipment provides synchronization channel or trigger to other equipment EXTERNAL - this equipment receives synchronization channel or trigger from other equipment PASSTHRU - this equipment receives synchronization channel or trigger and forwards it NO TRIGGER - data acquisition not synchronized by common channel or trigger Set to "NO TRIGGER"	ALWAYS	AUTO
(0018,1800)	1	CS	Acquisition Time Synchronized	Acquisition DateTime (0008,002A) synchronized with external time reference. Enumerated Values: Y, N See C.7.4.2.1.4 Set to "N"	ALWAYS	AUTO

Table 8-45 Raw Data IOD – Module "General Equipment"

Tag	Type	VR	Name	Description	PoV	Source
(0008,0070)	2	LO	Manufacturer	Manufacturer of the equipment that produced the composite instances. Always "Carl Zeiss Meditec"	ALWAYS	AUTO
(0008,0080)	3	LO	Institution Name	Institution where the equipment that produced the composite instances is located. Value as configured in Institution Edit dialog.	ALWAYS	CONFIG

Copyright: © Carl Zeiss Meditec, Inc.

(0008,1010)	3	SH	Station Name	User defined name identifying the machine that produced the composite instances. As configured in Equipment Edit dialog.	ANAP	CONFIG
(0008,1090)	3	LO	Manufacturer's Model Name	Manufacturer's model name of the equipment that produced the composite instances. Always "CIRRUS HD-OCT 5000" or "CIRRUS HD-OCT 500"	ALWAYS	AUTO
(0018,1000)	3	LO	Device Serial Number	Manufacturer's serial number of the equipment that produced the composite instances. Note: This identifier corresponds to the device that actually created the images, such as a CR plate reader or a CT console, and may not be sufficient to identify all of the equipment in the imaging chain, such as the generator or gantry or plate. The serial number of the instrument in case of an Acquisition Modality. The model number plus license certificate number in case of a Review Station.	ALWAYS	AUTO
(0018,1020)	3	LO	Software Version(s)	Manufacturer's designation of software version of the equipment that produced the composite instances. See Section C.7.5.1.1.3. Always <acquisition software version>\<generated software version> Where <generated software version> is "11.5.x.y"	ALWAYS	AUTO

Table 8-46 Raw Data IOD – Module "Acquisition Context"

Tag	Type	VR	Name	Description	PoV	Source
(0040,0555)	2	SQ	Acquisition Context Sequence	A sequence of Items that describes the conditions present during the acquisition of the data of the SOP Instance. Zero or more items may be included in this sequence.	ALWAYS	AUTO
>(0040,A043)	1	SQ	Concept Name Code Sequence	A concept that constrains the meaning of (i.e. defines the role of) the Observation Value. The "Name" component of a Name/Value pair. This sequence shall contain exactly one item.	ALWAYS	AUTO
>>(0008,0100)	1	SH	Code Value	See Section 8.1. ACQUISION, APPLICATION, DATASET, NIM, NOISE, MOTION, ONH, RNFLTT, GANGLION (for cubes), Averaging (for HD rasters)	ALWAYS	AUTO
>>(0008,0102)	1	SH	Coding Scheme Designator	See Table 8-50 Coding Scheme "99CZM_OCTVER". ALWAYS 99CZM_OCTVER	ALWAYS	AUTO
>>(0008,0103)	1C	SH	Coding Scheme Version	See Section 8.2. Required if the value of Coding Scheme Designator (0008,0102) is not sufficient to identify the Code Value (0008,0100) unambiguously. May be present otherwise.	ALWAYS	AUTO

Copyright: © Carl Zeiss Meditec, Inc.

				VALUE: 20120419		
>>(0008,0104)	1	LO	Code Meaning	See Table 8-50 Coding Scheme “99CZM_OCTVER”.	ALWAYS	AUTO
>(0040,A160)	1C	UT	Text Value	This is the Value component of a Name/Value pair when the Concept implied by Concept Name Code Sequence (0040,A043) is a Text Observation Value. Required if Date (0040,A121), Time (0040,A122), and Person Name (0040,A123) do not fully describe the concept specified by Concept Name Code Sequence (0040,A043). Shall not be present otherwise. CIRRUS Software Version	ALWAYS	AUTO

Table 8-47 Raw Data IOD – Module “Raw Data”

Tag	Type	VR	Name	Description	PoV	Source
(0020,0013)	2	IS	Instance Number	A number that identifies this raw data. The value shall be unique within a series. For Angiography Montage: - Constituent RAW Data: between [0 .. 5] - Montage Analysis RAW Data: empty For others: - Acquisition RAW data: 1 - Analysis RAW Data: 0	ALWAYS	AUTO
(0008,0023)	1	DA	Content Date	The date the raw data creation was started.	ALWAYS	AUTO
(0008,0033)	1	TM	Content Time	The time the raw data creation was started.	ALWAYS	AUTO
(0008,002A)	3	DT	Acquisition Datetime	The date and time that the acquisition of data started. Note: The synchronization of this time with an external clock is specified in the synchronization Module in Acquisition Time synchronized (0018,1800).	ALWAYS	AUTO
(0008,9123)	1	UI	Creator-Version UID	Unique identification of the equipment and version of the software that has created the Raw Data information. The UID allows one to avoid attempting to interpret raw data with an unknown format.	ALWAYS	AUTO
(0008,114A)	3	SQ	Referenced Instance Sequence	Other Instances significantly related to this Instance. One or more Items may be included in this Sequence.	ANAP	AUTO

Copyright: © Carl Zeiss Meditec, Inc.

>(0008,1150)	1	UI	Referenced SOP Class UID	Uniquely identifies the referenced SOP Class. The value shall be "1.2.840.10008.5.1.4.1.1.66" as we refer to a DICOM RAW instance.	ALWAYS	AUTO
>(0008,1155)	1	UI	Referenced SOP Instance UID	Uniquely identifies the referenced SOP Instance.	ALWAYS	AUTO
>(0040,A170)	1	SQ	Purpose of Reference Code Sequence	Describes the purpose for which the reference is made. Only a single Item shall be permitted in this sequence. See NEMA PS.3.3 C.7.6.16.2.5.1.	ALWAYS	AUTO
>>(0008,0100)	1	SH	Code Value	Please see Table 8-52 Acquisition Scan Protocols. Montage Angio Analysis also uses (121329, DCM, “Source Image for montage”)	ALWAYS	AUTO
>>(0008,0102)	1	SH	Coding Scheme Designator	Set to “99CZM” Montage Angio Analysis also uses (121329, DCM, “Source Image for montage”)	ALWAYS	AUTO
>>(0008,0103)	1C	SH	Coding Scheme Version	See Section 8.2. Required if the value of Coding Scheme Designator (0008,0102) is not sufficient to identify the Code Value (0008,0100) unambiguously. May be present otherwise. Set to “1.0” Not present when DCM is used as Coding Schema Designator.	ANAP	AUTO
>>(0008,0104)	1	LO	Code Meaning	Please see Table 8-52 Acquisition Scan Protocols. Montage Angio Analysis also uses (121329, DCM, “Source Image for montage”)	ALWAYS	AUTO

Table 8-48 Raw Data IOD - Module "Sop Common”

Tag	Type	VR	Name	Description	PoV	Source
(0008,0016)	1	UI	SOP Class UID	Uniquely identifies the SOP Class. See NEMA PS3.3 C.12.1.1.1 for further explanation. See also PS 3.4. Always “1.2.840.10008.5.1.4.1.1.66”	ALWAYS	AUTO
(0008,0018)	1	UI	SOP Instance UID	Uniquely identifies the SOP Instance. See NEMA PS3.3 C.12.1.1.1 for further explanation. See also PS 3.4.	ALWAYS	AUTO
(0008,0005)	1C	CS	Specific Character Set	Character Set that expands or replaces the Basic Graphic Set. Required if an expanded or replacement character set is used. See NEMA PS3.3 C.12.1.1.2 for Defined Terms. Always “ISO_IR 192” for UTF-8 encoded Unicode.	ALWAYS	AUTO

Copyright: © Carl Zeiss Meditec, Inc.

(0008,0012)	3	DA	Instance Creation Date	Date the SOP Instance was created.	ALWAYS	AUTO
(0008,0013)	3	TM	Instance Creation Time	Time the SOP Instance was created.	ALWAYS	AUTO

Copyright: © Carl Zeiss Meditec, Inc.

8.1.2 Usage of Attributes from Received IOD's

The usage of attributes of Modality Worklist IODs is described in chapter 4.2.1.3.2 Activity – Query Modality Worklist.

The case of patient data collision is outlined in chapter of Study Root Query/Retrieve SOP Class.

8.1.3 Attribute Mapping

In scheduled case, the following attributes are mapped from Modality Worklist to instances of Encapsulated PDF IOD, Ophthalmic Tomography IOD, Ophthalmic Photography IOD and Raw Data IOD.

Table 8-49 Attribute Mapping

Modality Worklist			Instance IOD	Editable
(0020,000D)	Study Instance UID	(0020,000D)	Study Instance UID	No
(0008,0050)	Accession Number	(0008,0050)	Accession Number	No
(0040,1001)	Requested Procedure ID	(0040,0275)>(0040,1001)	Request Attributes Sequence > Requested Procedure ID	No
(0032,1060)	Requested Procedure Description	(0008,1030)	Study Description (for EPDF IOD)	No
		(0040,0275)>(0032,1060)	Request Attributes Sequence > Requested Procedure Description	No
(0010,0021)	Issuer of Patient ID	(0010,0021)	Issuer of Patient ID	No
(0008,0090)	Referring Physicians Name	(0008,0090)	Referring Physicians Name	No
(0010,0010)	Patients Name	(0010,0010)	Patients Name	No
(0010,0020)	Patient ID	(0010,0020)	Patient ID	No
(0100,0030)	Patients Birth Date	(0010,0030)	Patients Birth Date	No
(0010,0040)	Patients Sex	(0010,0040)	Patients Sex	No
(0010,4000)	Patient Comments	(0010,4000)	Patient Comments	No

8.1.4 Coerced/Modified Files

Those tags are listed in chapter 4.2.1.3.2 Activity – Query Modality Worklist. Other attributes get lost and are not available in the CIRRUS HD-OCT Application Software.

Copyright: © Carl Zeiss Meditec, Inc.

8.2 Data Dictionary of Private Attributes

The Private Attributes added to created SOP Instances are listed in the Tables below. CIRRUS HD-OCT reserves blocks of private attributes in group 2201.

Table 8-50 Private Dictionary Group (2201,00xx) = "99CZM_NIM_INTERNAL_01"

Occurs in: ALL IODs

Tag	Attribute Name	VR	VM
(2201,00xx)	Private Creator	LO	1
(2201,xx00)	Iod_name_meta_info	LT	1
(2201,xx01)	Czm_xml_version	LT	1
(2201,xx02)	private_module_names_and_versions	LT	1

8.3 Coded Terminology and Templates

For exact information on algorithm versions, a few additional parameters, not defined in the Raw Data-IOD, are used. These parameters are stored in the Acquisition Context Sequence as defined below.

The Coding Scheme Designator used for the following parameters is "99CZM_OCTVER", the Coding Scheme Version is "20120419".

Table 8-51 Coding Scheme "99CZM_OCTVER"

Coding Name	Coding Type	Values	Code Meaning / Comments
APPLICATION	Text Value	"11.5.x.y"	Application version for IOD creation.

Copyright: © Carl Zeiss Meditec, Inc.

ACQUISITION	Text Value	“11.5.x.y”	Application version for acquisition of instance. If acquired with current software version: CIRRUS 11.5: “11.5.x.y” If acquired with previous software versions one of the following: “2.0.0.54” “2.0.1.3” “3.0.0.64” “3.0.0.71” “4.0.0.29” “4.0.1.3” “4.5.0.111” “4.5.1.11” “4.6.0.95” “4.6.1.6” “5.0.0.326” “5.1.0.96” “5.1.1.4” “5.1.1.6” “5.2.0.210” “5.2.1.12” “6.0.0.599” “6.0.1.24” “6.5.0.740” “6.5.0.772” “7.0.1.290" “7.0.2.5” “7.0.3.19” “7.5.0.56” “8.0.0.518” “8.1.0.117” “7.6.0.118” “9.0.0.281” “9.5.0.8712” “9.5.0.11469” “10.0.0.14618” “11.0.0.29946”
DATASET	Text Value	"1.0.0.0"	Dataset configuration schema version.
NIM	Text Value	“2.6.2”	NIM version at time of creation.
MOTION	Text Value	“1.0.0”	Motion correction algorithm.
AVERAGING	Text Value	“1.0.0”	Line averaging algorithm.
NOISE	Text Value	“1.0.0”	Noise reduction algorithm.
RNFLTT	Text Value	“1.0.16”	Tomtec segmentation for RNFL and ILM.
ONH	Text Value	“1.0”	Optic Nerve Head segmentation for ILM, RPE and RPEFit.
GANGLION	Text Value	“1.0.0”	Ganglion Cell segmentation for GCL and IPL.
MLS	Text Value	“1.0.0”	Multilayer Segmentation Algorithm

Copyright: © Carl Zeiss Meditec, Inc.

The Application Software AE uses custom coded terminology to describe the scan protocol used during acquisition:

Table 8-52 Acquisition Scan Protocols

Code Value	Coding Scheme Designator	Coding Scheme Version	Code Meaning / Comments
SD-S1	99CZM	1.0	Macular Cube 200X200
SD-S2	99CZM	1.0	Macular Cube 512x128
SD-S3	99CZM	1.0	5 Line Raster
SD-S9(deprecated) or SD-S10	99CZM	1.0	Optic Disc Cube 200x200
SD-S21	99CZM	1.0	Anterior Segment 5 Line Raster
SD-S22	99CZM	1.0	Anterior Segment Cube 512x128
SD-S51	99CZM	1.0	HD 5 Line Raster
SD-S71	99CZM	1.0	HD Cornea
SD-S72	99CZM	1.0	HD Angle
SD-S73	99CZM	1.0	Anterior Chamber
SD-S74	99CZM	1.0	Pachymetry
SD-S75	99CZM	1.0	Multi Slice Angle
SD-S77	99CZM	1.0	HD 1 Line 100x
SD-S78	99CZM	1.0	HD 21 Line
SD-S79	99CZM	1.0	HD Cross
SD-S80	99CZM	1.0	Wide Angle to Angle
SD-S83	99CZM	1.0	HD Radial
SD-S90	99CZM	1.0	Angiography 6x6 mm
SD-S91	99CZM	1.0	Angiography 3x3 mm
SD-S92	99CZM	1.0	Angiography 8x8 mm
SD-S102	99CZM	1.0	Angiography 6x6 mm Constituent
SD-S103	99CZM	1.0	Angiography 8x8 mm Constituent
SD-S961	99CZM	1.0	Angiography ONH 4.5x4.5 mm

The Application Software AE uses custom coded terminology to describe the analysis protocol used during processing:

Table 8-53 Analysis Protocols

Code Value	Coding Scheme Designator	Coding Scheme Version	Code Meaning / Comments
SD-MTA	99CZM	1.0	Macular Thickness
SD-HDIA	99CZM	1.0	High Definition Images
SD-ACHDIA	99CZM	1.0	Anterior Segment High Definition Images
SD-GPA	99CZM	1.0	Guided Progression Analysis
SD-GOUA	99CZM	1.0	Glaucoma OU Analysis
SD-ACA	99CZM	1.0	Anterior Segment Analysis
SD-HDSA	99CZM	1.0	HD Spotlight Images

Copyright: © Carl Zeiss Meditec, Inc.

SD-ACEHDIA	99CZM	1.0	HD Cornea Analysis Note: When HD Cornea, Wide Angle to Angle and HD Angle scans are analyzed the analysis type will be SD-ACEHDIA
SD-WIDEIA	99CZM	1.0	Anterior Chamber Analysis
SD-PACHYMETRY	99CZM	1.0	Pachymetry Analysis
SD-MCA	99CZM	1.0	Macular Change Analysis
SD-ONH	99CZM	1.0	ONH and RNFL OU Analysis
SD-MTAOU	99CZM	1.0	Macular Thickness OU Analysis
SD-AIA	99CZM	1.0	Advanced Visualization
SD-3D	99CZM	1.0	3D Volumization
SD-SES	99CZM	1.0	Singe Eye Summary
SD-ANGIO	99CZM	1.0	Angiography Report Analysis
SD-MONTAGE6	99CZM	1.0	Montage Angio 6x6 mm
SD-MONTAGE8	99CZM	1.0	Montage Angio 8x8 mm
SD-MONTAGES	99CZM	1.0	Angiography Constituent Analysis

The Application Software AE uses custom coded terminology to describe the scan protocol used in a dedicated series:

Table 8-54 Scan Pattern

Code Value	Coding Scheme Designator	Coding Scheme Version	Code Meaning / Comments
MACULAR_CUBE	99CZM	20120401	Macular Cube Scan
RASTER	99CZM	20120401	Raster Scan
RASTER_HD	99CZM	20120401	Raster HD Scan
OPTIC_DISC_CUBE	99CZM	20120419	Optic Disc Cube Scan
ANTERIOR_RASTER	99CZM	20120401	Anterior Raster Scan
ANTERIOR_CUBE	99CZM	20120401	Anterior Cube Scan
HD_ANGLE	99CZM	20120419	HD Angle Scan
ANTERIOR_CHAMBER	99CZM	20120419	Anterior Chamber
HD_CORNEA	99CZM	20120419	HD Cornea Scan
PACHYMETRY	99CZM	20120419	Pachymetry Scan
RASTER_SINGLE	99CZM	20120419	HD 1 Line 100x Scan
RASTER_21_LINES	99CZM	20120419	HD 21 Line Scan
RASTER_GRID	99CZM	20120419	HD Cross Scan
WIDE_ANGLE2ANGLE	99CZM	20120419	Wide Field Angle To Angle Scan
RASTER_RADIAL	99CZM	20120419	HD Radial Scan
ANGIO_6MM	99CZM	20120419	Angiography 6 mm
ANGIO_3MM	99CZM	20120419	Angiography 3 mm
ANGIO_8MM	99CZM	20120419	Angiography 8 mm
ANGIO_6MM_CON	99CZM	20120419	Angiography 6x6 mm Constituent
ANGIO_8MM_CON	99CZM	20120419	Angiography 8x8 mm Constituent

Copyright: © Carl Zeiss Meditec, Inc.

Code Value	Coding Scheme Designator	Coding Scheme Version	Code Meaning / Comments
ANGIO_ONH	99CZM	20120419	Angiography ONH 4.5x4.5 mm

The Application Software AE uses custom coded terminology to describe the further SOP instance properties.

Table 8-2 Other SOP Instance Properties

Code Value	Coding Scheme Designator	Coding Scheme Version	Code Meaning / Comments
SRC_INSTANCE	99CZM	20120401	“Source instance used to create this instance".
IPAR	99CZM	20120401	“Image Presentation Aspect Ratio width and height” 1. Numeric value ({ratio}, “UCUM”, “ratio”)

When the Application Software performs analysis on an acquisition protocol it will generate the following Analysis protocol type.

Table 8-56 Protocol Pattern Mappings

Acquisition Protocol	PATTERN TYPE	Analysis Protocol
SD-S1	MACULAR_CUBE	SD-MTA
SD-S2	MACULAR_CUBE	SD-MTA
SD-S3	RASTER	SD-HDIA
SD-S10	OPTIC_DISC_CUBE	SD-GPA, SD-GOUA
SD-S21	ANTERIOR_RASTER	SD-ACHDIA
SD-S22	ANTERIOR_CUBE	SD-ACA
SD-S51	RASTER_HD	SD-HDIA
SD-S71	HD_CORNEA	SD-ACEHDIA
SD-S72	HD_ANGLE	SD-ACEHDIA
SD-S73	ANTERIOR_CHAMBER	SD-WIDEIA
SD-S74	PACHYMETRY	SD-PACHYMETRY
SD-S77	RASTER_SINGLE	SD-HDSA
SD-S78	RASTER_21_LINES	SD-HDSA
SD-S79	RASTER_GRID	SD-HDSA
SD-S80	WIDE_ANGLE2ANGLE	SD-ACEHDIA
SD-S83	RASTER_RADIAL	SD-HDSA
SD-S90	ANGIO_6MM	SD-ANGIO
SD-S91	ANGIO_3MM	SD-ANGIO
SD-S92	ANGIO_8MM	SD-ANGIO
SD-S102	ANGIO_6MM_CON	SD-MONTAGE6
SD-S103	ANGIO_8MM_CON	SD-MONTAGE8
SD-S961	ANGIO_OHN	SD-ANGIO

Copyright: © Carl Zeiss Meditec, Inc.

8.4 Greyscale Image Consistency

Not applicable.

8.5 Standard Extended / Specialized/ Private SOP Classes

The following standard extensions are used in the IODs described in Chapter 8.1.1 Created SOP Instance(s).

Table 8-6 Encapsulated PDF IOD - Module “CzmEncapsulatedPdfSeriesExtension"

8.6 Private Transfer Syntaxes

No Private Transfer Syntax is supported.

Copyright: © Carl Zeiss Meditec, Inc.

The product meets the essentials requirements stipulated in Annex I of the 93/42/EEC Directive governing medical devices.

The product is labeled with:

CE 0297

Carl Zeiss Meditec, Inc.
5160 Hacienda Drive
Dublin, CA 94568
USA
Toll Free: 1 800 341 6968
Phone: +1 925 557 4100
Fax: +1 925 557 4101
info.meditec.us@zeiss.com
www.zeiss.com/med
www.zeiss.com/cirrus
www.zeiss.com/dicom

EC REP Carl Zeiss Meditec AG
Goeschwitzer Strasse 51-52
07745 Jena
Germany
Phone: +49 36 41 22 03 33
Fax: +49 36 41 22 01 12
info.meditec@zeiss.com
www.zeiss.com/med

Copyright: © Carl Zeiss Meditec, Inc.